EVO205TT
22/06/2026
FROM S/N 260225 TO CURRENT

4048978	EVO205TT - STANDARD
4051593	EVO205TT - FILAMENT LIGHTS
4051594	EVO205TT - ADJUSTABLE DRAWBAR & FILAMENT LIGHTS
4051592	EVO205TT - ADJUSTABLE DRAWBAR

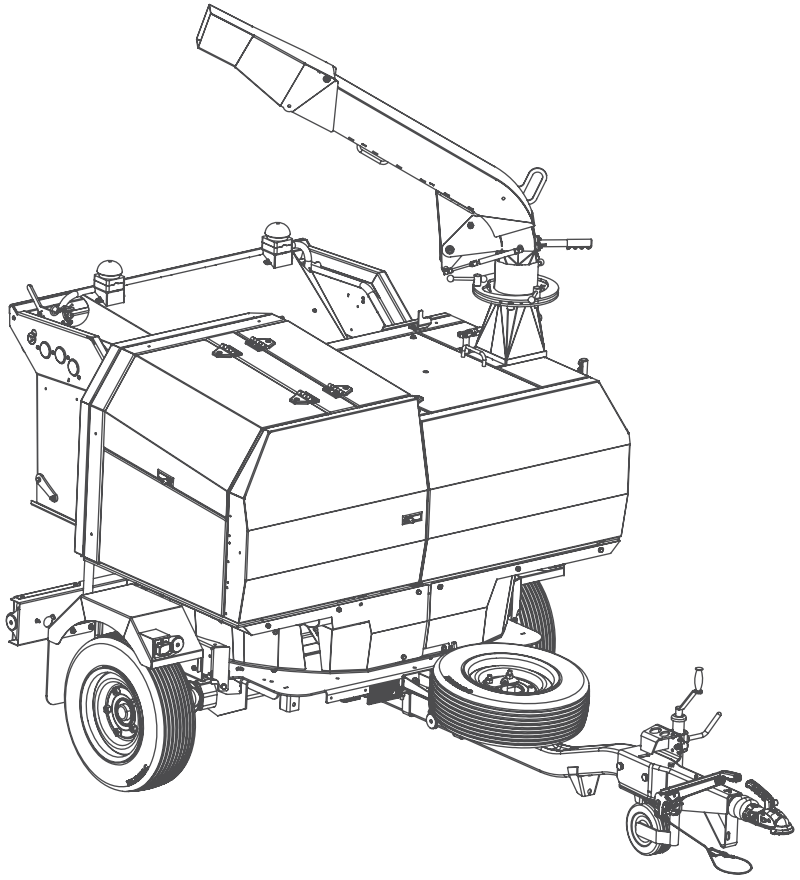

L R

DRAWING NUMBER:	SHEET NO.	REVISION:
4048978	1/1	B

DESCRIPTION:
EVO205TT - STANDARD

GreenMech Ltd
Tomo Industrial Estate
Stowmarket
Suffolk
IP14 5AY
United Kingdom

Tel: +44(0)1449 765800
E-mail: sales@greenmech.co.uk

GreenMech
The Professionals' Choice

COPYRIGHT GREENMECH LTD.

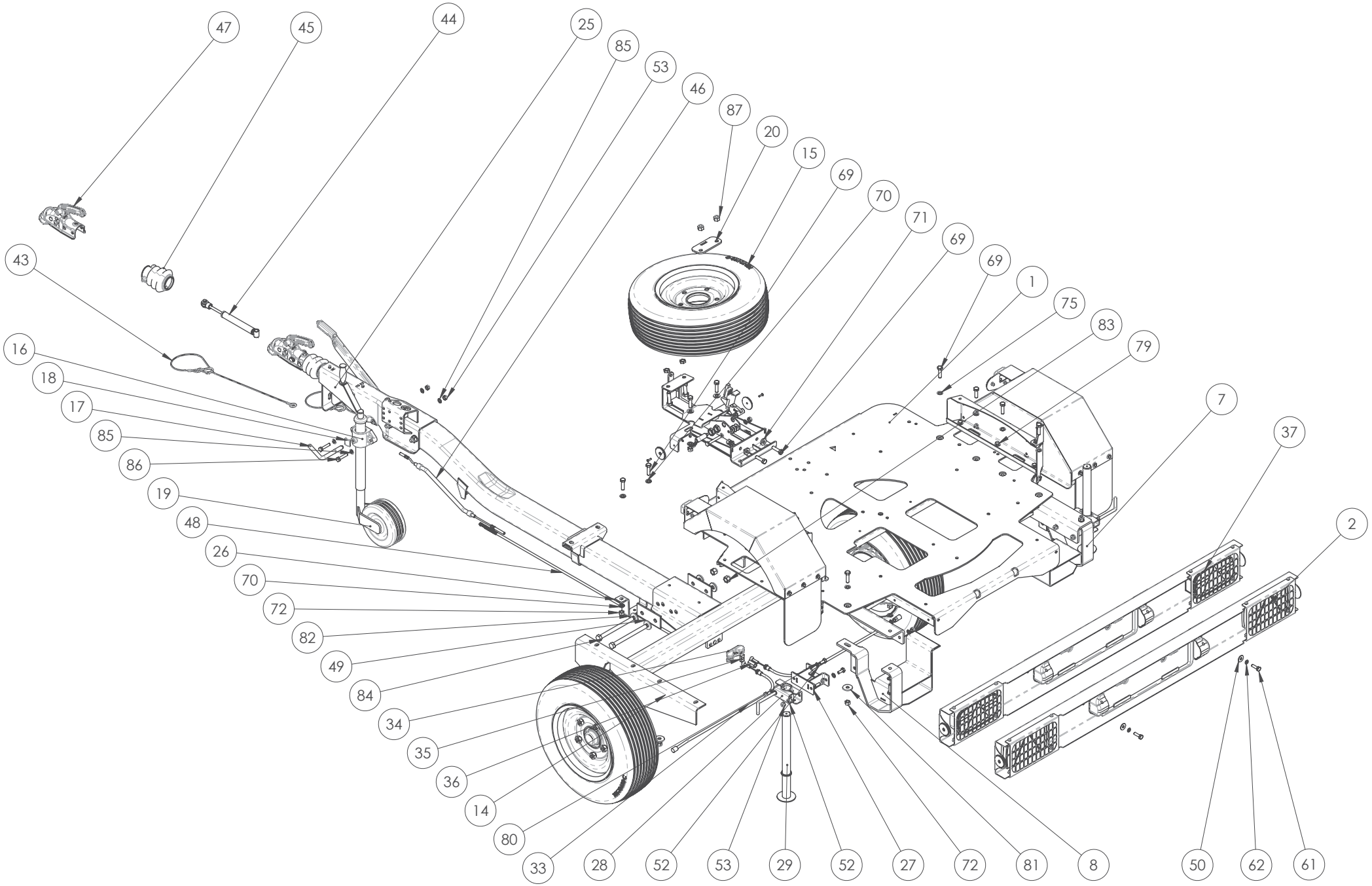

L R		
DRAWING NUMBER: 4049073	SHEET NO. 1/3	REVISION: B
DESCRIPTION: EVO205TT ROLLING CHASSIS MODULE - STANDARD		

GreenMech Ltd
Tomo Industrial Estate
Stowmarket
Suffolk
IP14 5AY
United Kingdom

Tel: +44(0)1449 765800
E-mail: sales@greenmech.co.uk

GreenMech
The Professionals' Choice

COPYRIGHT GREENMECH LTD.

ITEM (21) 4052016 CHANGED AND (49) 4052027 ADDED

FOR MACHINES PRE S/N 260226 PLEASE USE RETRO FIT KIT 4052070

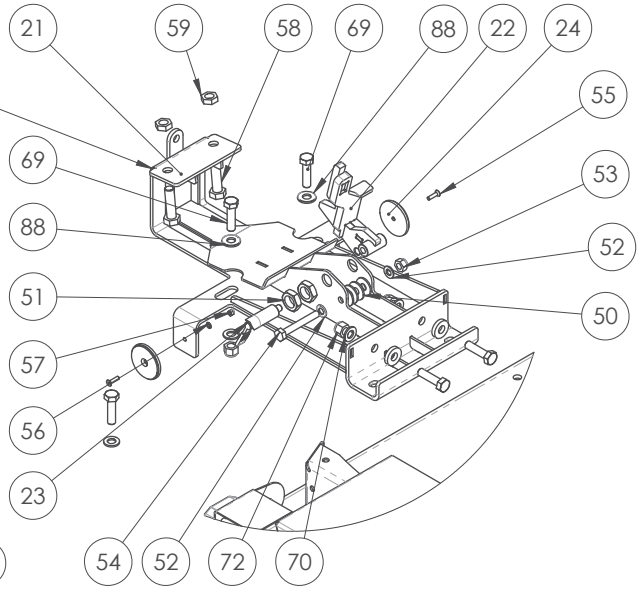

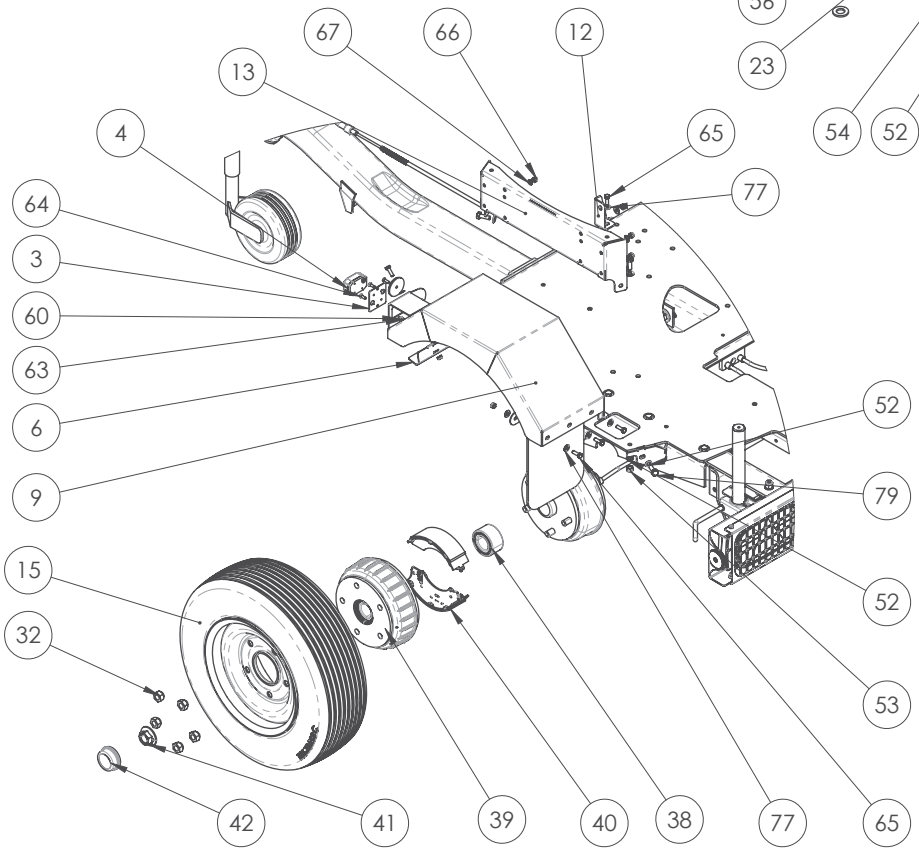

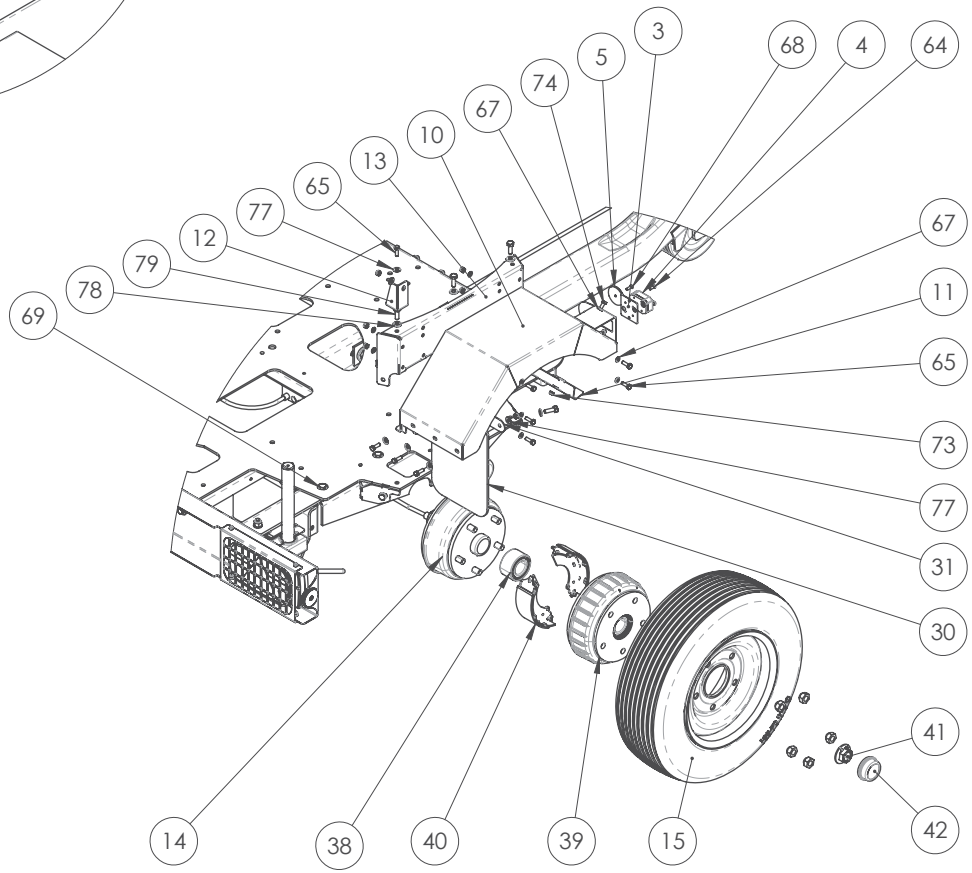

L ▭ R		◁
DRAWING NUMBER: 4049073	SHEET NO. 2/3	REVISION: B
DESCRIPTION: EVO205TT ROLLING CHASSIS MODULE - STANDARD		

GreenMech Ltd
Tomo Industrial Estate
Stowmarket
Suffolk
IP14 5AY
United Kingdom

Tel: +44(0)1449 765800
E-mail: sales@greenmech.co.uk

GreenMech
The Professionals' Choice

COPYRIGHT GREENMECH LTD.

ITEM NO.	PART NUMBER	REFERENCE NUMBER	DESCRIPTION	QTY.
1	4049056	N/A	CHASSIS FABRICATION	1
2	4037255	N/A	LED LIGHTING BOARD ASSEMBLY	1
3	4037244	N/A	RUNNING LIGHT MOUNTING PLATE	2
4	4011313	GM-1004-FML	FRONT WHITE MARKER LAMP	2
5	4001655	GM-1001-RWR	WHITE REFLECTOR	2
6	4042863	N/A	MUDGUARD LAMP WIRING CHANNEL LEFT HAND	1
7	4047413	N/A	RIGHT REAR LIFT POCKET ANTI TILT FABRICATION	1
8	4047408	N/A	LEFT REAR LIFT POCKET ANTI TILT FABRICATION	1
9	4042768	N/A	LEFT HAND MUDGUARD FABRICATION	1
10	4042798	N/A	RIGHT HAND MUDGUARD FABRICATION	1
11	4042865	N/A	MUDGUARD LAMP WIRING CHANNEL RIGHT HAND	1
12	4048452	N/A	BOLT ON MUDGUARD BRACE FABRICATION	2
13	4049455	N/A	MUDGUARD MOUNT FABRICATION	2
14	4042897	185010144	ALKO 1900KG AXLE	1
15	4011955	N/A	185X70R13 WHEEL	3
16	4008995	ARB150-1-1002	ALKO JOCKEY WHEEL CLAMP	1
17	4033776	N/A	JOCKEY WHEEL CLAMP HANDLE	1
18	4033777	N/A	JOCKEY WHEEL CLAMP PRESSURE PLATE	1
19	4005933	900940059	JOCKEY WHEEL	1
20	4041336	N/A	SPARE WHEEL CLAMP PLATE	1
21	4052016	N/A	T POLE CHASSIS TOP CLAMP FABRICATON	1
22	4038277	N/A	TRANSPORT LOCK FABRICATION	1
23	4022837	GN.34347	GN.34347 Index Plunger	1
24	4001656	GM-1001-RYR	AMBER REFLECTOR	2
25	4047076	1731808	ALKO CRANKED T POLE 1731808	1
26	4049555	N/A	CHASSIS FRONT STEADY U CLAMP	1
27	4049568	N/A	DROP SUPPORT LEG STAND OFF FABRICATION	2
28	4002048	N/A	ALKO JOCKEY WHEEL CLAMP	2
29	4049679	N/A	JACK LEG FABRICATION	2
30	4006282	MK2 QTT-1-1001	RUBBER MUDFLAP	2
31	4002554	301010073	MUDFLAP RETAINER PLATE	2
32	4048404	EC1928-7-151	WHEELNUT	10
33	4051502	247284	BRAKE CABLE 890	2
34	4011795	1651419	BRAKE COMPENSATOR	1
35	4011792	1651490	COMPENSATOR SPACER NUT	1
36	4001705	ARB150-1-1001-5	COMPENSATOR NUT	1
37	4051607	N/A	FILAMENT LIGHTBOARD ASSEMBLY	1
38	4051439	582226	42X80X42 WHEEL BEARING	2
39	4051441	578835	ALKO 2361 BRAKE DRUM M16X5 X 165.1 PCD WITH BEARING	2
40	4044102	1213890	ALKO 2361 BRAKE SHOES	2

ITEM NO.	PART NUMBER	REFERENCE NUMBER	DESCRIPTION	QTY.
41	4051438	582506	FLANGE NUT M27X2	2
42	4051437	582505	ALKO SEALING CAP 65 DIA	2
43	4047166	368605 / EC1523147-4	BREAKAWAY CABLE	1
44	4051791	372641	1731808 T-POLE DAMPER 372641	1
45	4014101	366356	GAITER	1
46	4051796	224679	224679 BOWDEN CABLE 360/645 LONG	1
47	4048211	N/A	ALKO 270 BALL HITCH	1
48	4051804	1310111	HAND BRAKE ROD 1275	1
49	4052027	N/A	AXLE CLAMP PLATE	2
50	91002HD30	FASTENERS	M10 30MM HD WASHER	6
51	92001PT1.5	FASTENERS	M20 FINE PLAIN THIN NUT	2
52	91002A	FASTENERS	M10 A WASHER	30
53	91001	FASTENERS	M10 NYLOC NUT	23
54	91075S	FASTENERS	M10 X 75 SET	1
55	80520	FASTENERS	M5 X 20 CSK	2
56	90502A	FASTENERS	M5 A WASHER	2
57	90501	FASTENERS	M5 NYLOC NUT	2
58	91450S	FASTENERS	M14 X 50 SET	2
59	91401PT	FASTENERS	M14 THIN PLAIN NUT	2
60	90602B	FASTENERS	M6 B WASHER	6
61	91035S	FASTENERS	M10 X 35 SET	2
62	91003	FASTENERS	M10 SPRING WASHER	2
63	90601	FASTENERS	M6 NYLOC NUT	6
64	60616	FASTENERS	M6 X 16 BUTTON	4
65	90825S	FASTENERS	M8 X 25 SET	19
66	90801	FASTENERS	M8 NYLOC NUT	18
67	90802A	FASTENERS	M8 A WASHER	24
68	80620	FASTENERS	M6 X 20 CSK	2
69	91245S	FASTENERS	M12 X 45 SET	10
70	91202A	FASTENERS	M12 A WASHER	10
71	91202HD30	FASTENERS	M12 30MM HD WASHER	2
72	91201	FASTENERS	M12 NYLOC NUT	16
73	90801T	FASTENERS	M8 THIN NYLOC NUT	2
74	90818S	FASTENERS	M8 X 18 SET	1
75	91202B	FASTENERS	M12 B WASHER	10
76	91240	FASTENERS	M12 X 40	6
77	90802C	FASTENERS	M8 C WASHER	16
78	91002C	FASTENERS	M10 C WASHER	10
79	91030S	FASTENERS	M10 X 30 SET	14
80	91025S	FASTENERS	M10 X 25 SET	4
81	91202HD44	FASTENERS	M12 44MM HD WASHER	8
82	91602HD40	FASTENERS	M16 40MM HD WASHER	4
83	91601	FASTENERS	M16 NYLOC NUT	2
84	916200	FASTENERS	M16 X 200	2
85	91002B	FASTENERS	M10 B WASHER	4
86	91050	FASTENERS	M10 X 50	2
87	91401	FASTENERS	M14 NYLOC NUT	2
88	91202C	FASTENERS	M12 C WASHER	2

L R

DRAWING NUMBER:	SHEET NO.	REVISION:
4049073	3/3	B

DESCRIPTION:
EVO205TT ROLLING CHASSIS MODULE - STANDARD

GreenMech Ltd
Tomo Industrial Estate
Stowmarket
Suffolk
IP14 5AY
United Kingdom

Tel: +44(0)1449 765800
E-mail: sales@greenmech.co.uk

GreenMech
The Professionals' Choice

COPYRIGHT GREENMECH LTD.

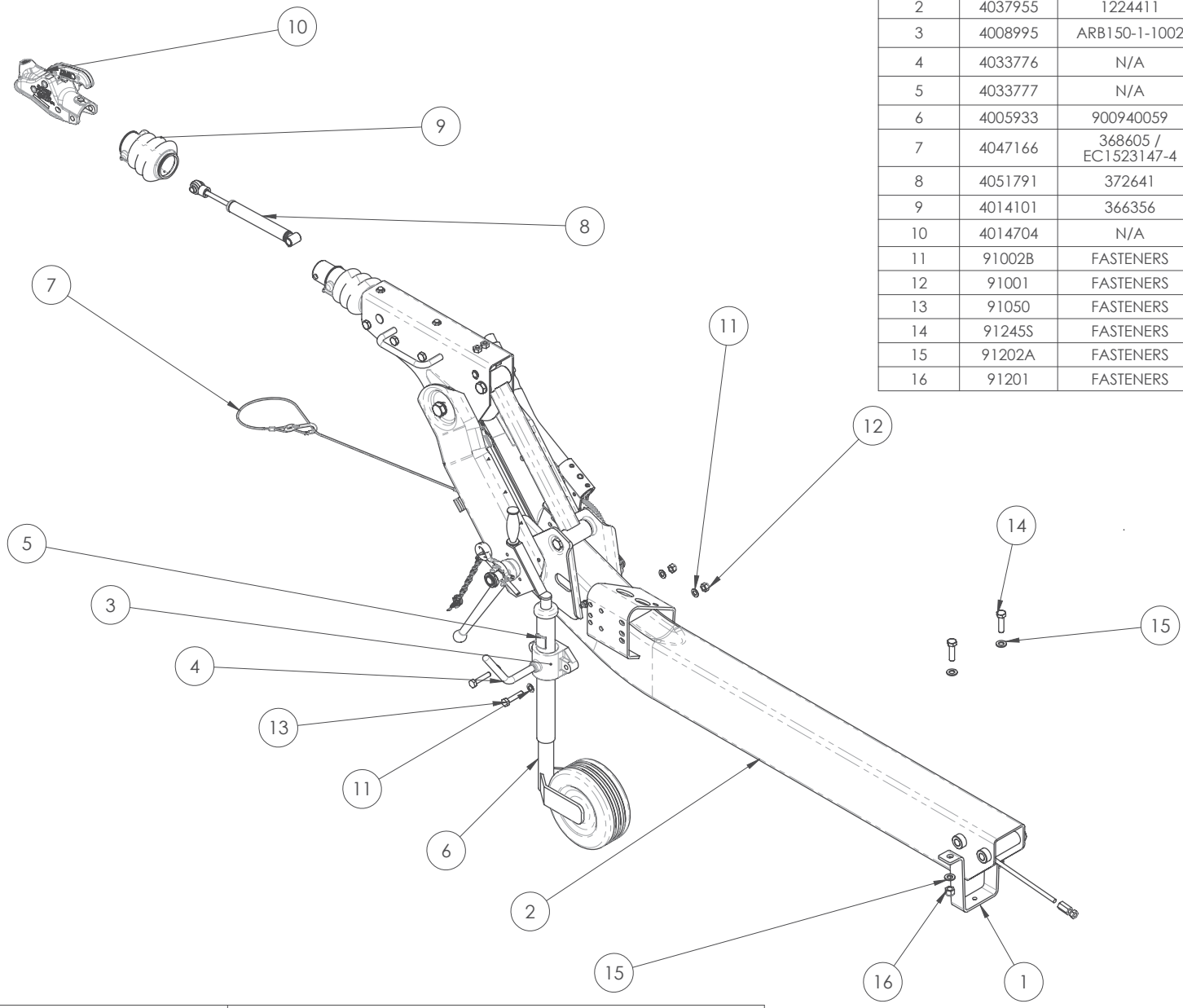

ITEM NO.	PART NUMBER	REFERENCE NUMBER	DESCRIPTION	QTY.
1	4049796	N/A	CHASSIS FRONT STEADY U CLAMP FOR SWAN NECK	1
2	4037955	1224411	ALKO ADJUSTABLE T POLE	1
3	4008995	ARB150-1-1002	ALKO JOCKEY WHEEL CLAMP	1
4	4033776	N/A	JOCKEY WHEEL CLAMP HANDLE	1
5	4033777	N/A	JOCKEY WHEEL CLAMP PRESSURE PLATE	1
6	4005933	900940059	JOCKEY WHEEL	1
7	4047166	368605 / EC1523147-4	BREAKAWAY CABLE	1
8	4051791	372641	1731808 T-POLE DAMPER 372641	1
9	4014101	366356	GAITER	1
10	4014704	N/A	ALKO AK301 BALL HITCH	1
11	91002B	FASTENERS	M10 B WASHER	4
12	91001	FASTENERS	M10 NYLOC NUT	2
13	91050	FASTENERS	M10 X 50	2
14	91245S	FASTENERS	M12 X 45 SET	2
15	91202A	FASTENERS	M12 A WASHER	4
16	91201	FASTENERS	M12 NYLOC NUT	2

L R

DRAWING NUMBER:	SHEET NO.	REVISION:
4051805	1/1	B

DESCRIPTION:
EVO205TT ROLLING CHASSIS MODULE - ADJUSTABLE DRAW BAR

GreenMech Ltd
Tomo Industrial Estate
Stowmarket
Suffolk
IP14 5AY
United Kingdom

Tel: +44(0)1449 765800
E-mail: sales@greenmech.co.uk

GreenMech
The Professionals' Choice

COPYRIGHT GREENMECH LTD.

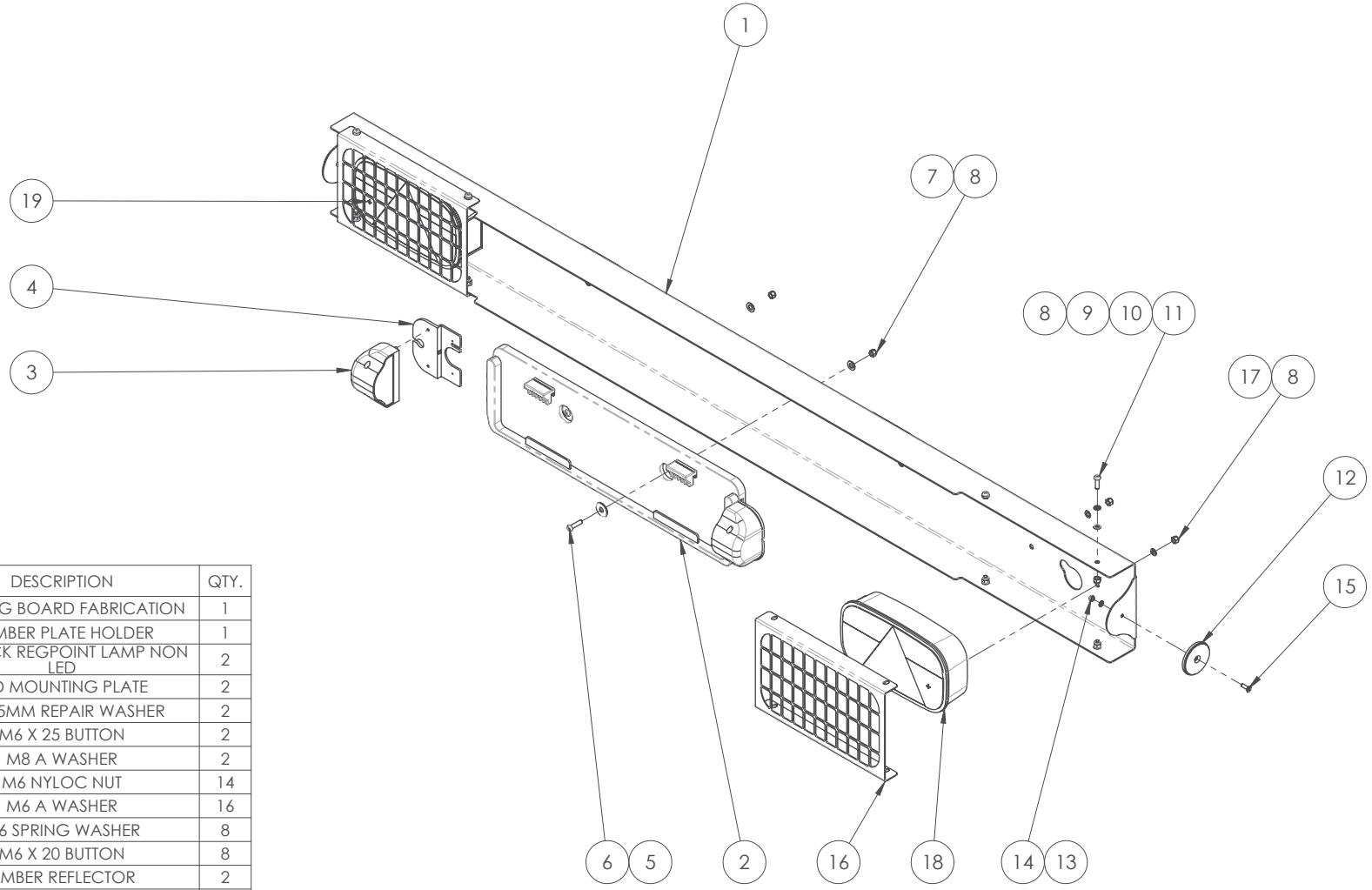

ITEM NO.	PART NUMBER	REFERENCE NUMBER	DESCRIPTION	QTY.
1	4037254	N/A	LIGHTING BOARD FABRICATION	1
2	4001652	EC1928464	NUMBER PLATE HOLDER	1
3	4040264	EC1928466	ASPOECK REGPOINT LAMP NON LED	2
4	4020444	N/A	LED MOUNTING PLATE	2
5	90802R25	FASTENERS	M8 25MM REPAIR WASHER	2
6	60625	FASTENERS	M6 X 25 BUTTON	2
7	90802A	FASTENERS	M8 A WASHER	2
8	90601	FASTENERS	M6 NYLOC NUT	14
9	90602A	FASTENERS	M6 A WASHER	16
10	90603	FASTENERS	M6 SPRING WASHER	8
11	60620	FASTENERS	M6 X 20 BUTTON	8
12	4001656	GM-1001-RYR	AMBER REFLECTOR	2
13	90502A	FASTENERS	M5 A WASHER	2
14	90501T	FASTENERS	M5 THIN NYLOC NUT	2
15	80516	FASTENERS	M5 X 16 CSK	2
16	4037631	N/A	LIGHT GUARD GRILLE SUPPORT	2
17	90602B	FASTENERS	M6 B WASHER	4
18	4001657	GM-1001-TLA	RIGHT HAND TAIL LIGHT ASSEMBLY	1
19	4001658	GM-1002-TLA	LEFT HAND TAIL LIGHT ASSEMBLY	1

L R

DRAWING NUMBER:	SHEET NO.	REVISION:
4051607	1/1	A

DESCRIPTION:
FILAMENT LIGHTBOARD ASSEMBLY

GreenMech Ltd
Tomo Industrial Estate
Stowmarket
Suffolk
IP14 5AY
United Kingdom

Tel: +44(0)1449 765800
E-mail: sales@greenmech.co.uk

GreenMech
The Professionals' Choice

COPYRIGHT GREENMECH LTD.

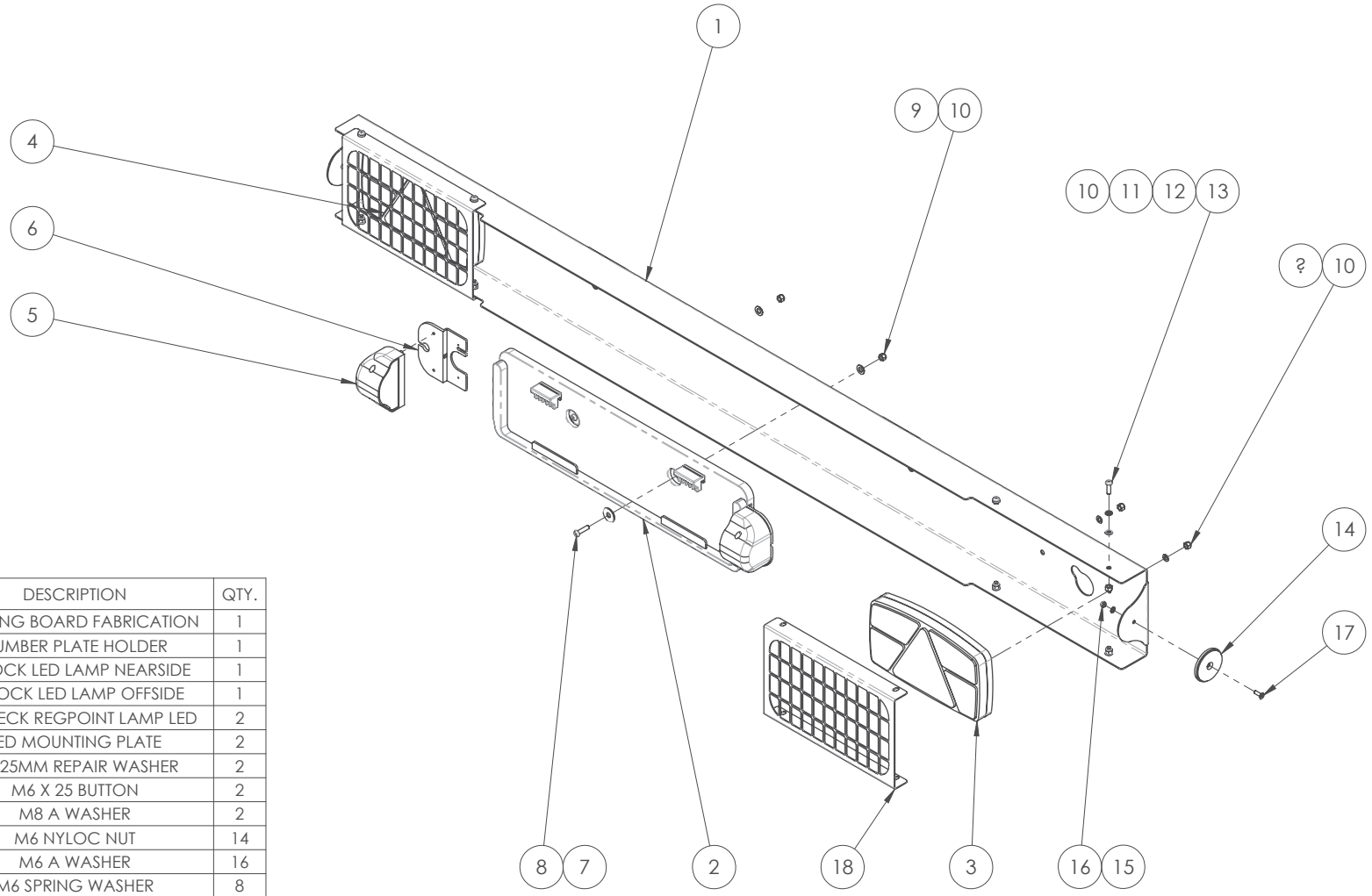

ITEM NO.	PART NUMBER	REFERENCE NUMBER	DESCRIPTION	QTY.
1	4037254	N/A	LIGHTING BOARD FABRICATION	1
2	4001652	EC1928464	NUMBER PLATE HOLDER	1
3	4001697	900950322	ASPOCK LED LAMP NEARSIDE	1
4	4001746	900950323	ASPOCK LED LAMP OFFSIDE	1
5	4011297	900950331	ASPOECK REGPOINT LAMP LED	2
6	4020444	N/A	LED MOUNTING PLATE	2
7	90802R25	FASTENERS	M8 25MM REPAIR WASHER	2
8	60625	FASTENERS	M6 X 25 BUTTON	2
9	90802A	FASTENERS	M8 A WASHER	2
10	90601	FASTENERS	M6 NYLOC NUT	14
11	90602A	FASTENERS	M6 A WASHER	16
12	90603	FASTENERS	M6 SPRING WASHER	8
13	60620	FASTENERS	M6 X 20 BUTTON	8
14	4001656	GM-1001-RYR	AMBER REFLECTOR	2
15	90502A	FASTENERS	M5 A WASHER	2
16	90501T	FASTENERS	M5 THIN NYLOC NUT	2
17	80516	FASTENERS	M5 X 16 CSK	2
18	4037631	N/A	LIGHT GUARD GRILLE SUPPORT	2
19	90602B	FASTENERS	M6 B WASHER	4

L R

DRAWING NUMBER:	SHEET NO.	REVISION:
4037255	1/1	A

DESCRIPTION:
LED LIGHTING BOARD ASSEMBLY

GreenMech Ltd
Tomo Industrial Estate
Stowmarket
Suffolk
IP14 5AY
United Kingdom

Tel: +44(0)1449 765800
E-mail: sales@greenmech.co.uk

GreenMech
The Professionals' Choice

COPYRIGHT GREENMECH LTD.

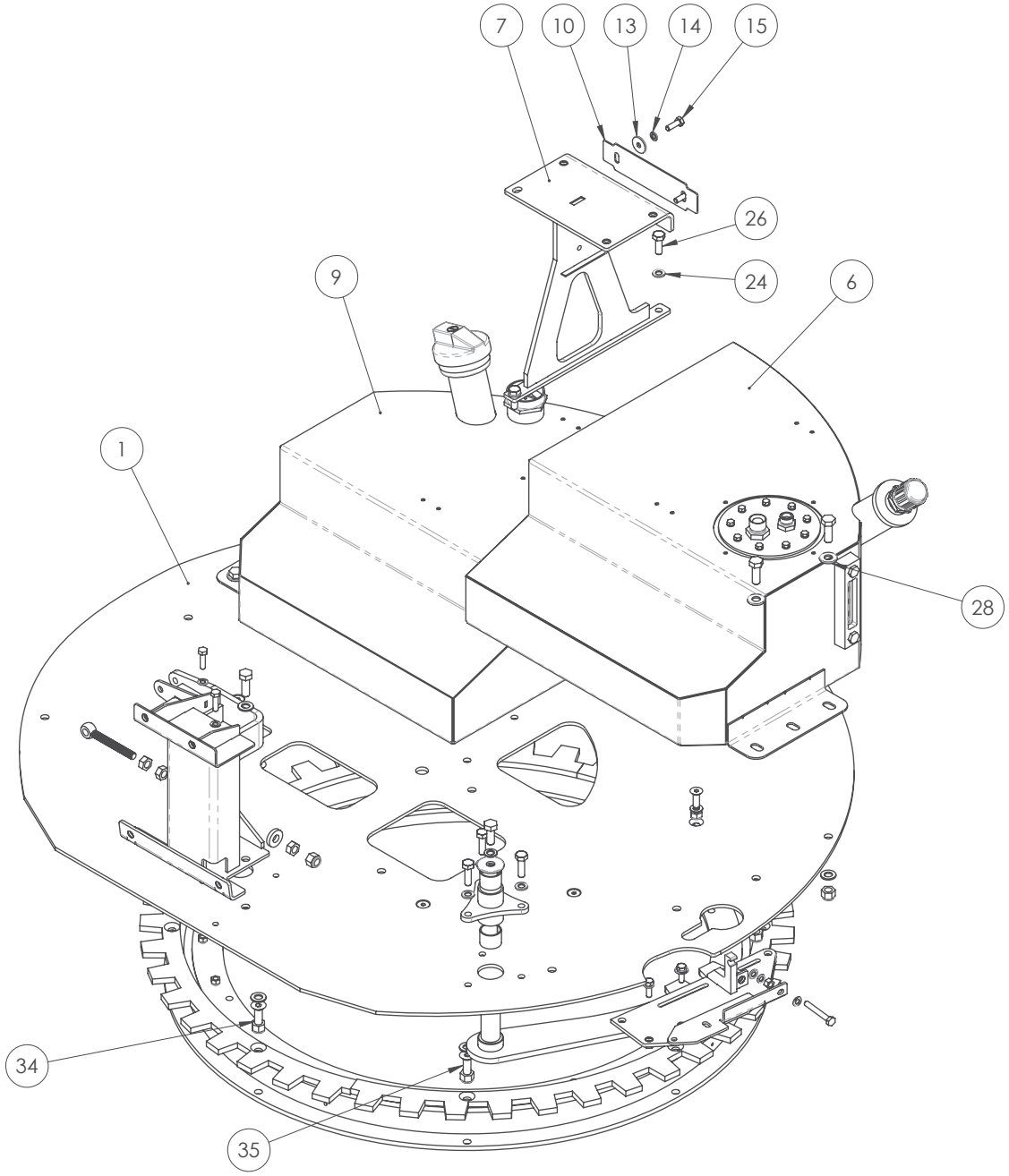

ITEM NO.	PART NUMBER	REFERENCE NUMBER	DESCRIPTION	QTY.
1	4042366	N/A	TURNTABLE BOLT PLATE	1
2	4012890	N/A	SLEW RING	1
3	4027943	N/A	TOOTHED RING SEGMENT	4
4	4046195	N/A	INDEXING ARM FABRICATION	1
5	4046226	N/A	CAM CHANNEL FABRICATION	1
6	4035677	N/A	HYDRAULIC TANK ASSEMBLY	1
7	4035502	N/A	FIXED BASE INFEED BOTTOM SUPPORT FABRICATION	1
8	4045833	N/A	REAR COVER SUPPORT FABRICATION	1
9	4035668	N/A	FUEL TANK ASSEMBLY	1
10	4035549	N/A	TANK CENTRE STOP PLATE	1
11	4046215	N/A	INDEXING ARM PIVOT FABRICATION	1
12	4008008	QC160-6-1024	GLACIER BUSH	2
13	90802HD28	FASTENERS	M8 28MM HD WASHER	2
14	90803	FASTENERS	M8 SPRING WASHER	5
15	90825S	FASTENERS	M8 X 25 SET	4
16	90802A	FASTENERS	M8 A WASHER	7
17	90802C	FASTENERS	M8 C WASHER	1
18	90860S	FASTENERS	M8 X 60 SET	1
19	90801P	FASTENERS	M8 PLAIN NUT	1
20	91230S	FASTENERS	M12 X 30 SET	1
21	91203	FASTENERS	M12 SPRING WASHER	1
22	91202HD44	FASTENERS	M12 44MM HD WASHER	1
23	91035S	FASTENERS	M10 X 35 SET	3
24	91002A	FASTENERS	M10 A WASHER	18
25	91001	FASTENERS	M10 NYLOC NUT	13
26	91030S	FASTENERS	M10 X 30 SET	2
27	91202A	FASTENERS	M12 A WASHER	14
28	91202C	FASTENERS	M12 C WASHER	4
29	91201	FASTENERS	M12 NYLOC NUT	14
30	91235S	FASTENERS	M12 X 35 SET	5
31	81030	FASTENERS	M10 X 30 CSK	8
32	90801	FASTENERS	M8 NYLOC NUT	2
33	90830S	FASTENERS	M8 X 30 SET	2
34	81245	FASTENERS	M12 X 45 CSK	4
35	81250	FASTENERS	M12 X 50 CSK	4
36	91202HD30	FASTENERS	M12 30MM HD WASHER	2
37	91201P	FASTENERS	M12 PLAIN NUT	3
38	4002444	QC160-1-1041 / 900930406	SWING BOLT	1

L R

DRAWING NUMBER:	SHEET NO.	REVISION:
4051597	1/2	A

DESCRIPTION:
EVO205TT TURNTABLE MODULE - STANDARD

GreenMech Ltd
Tomo Industrial Estate
Stowmarket
Suffolk
IP14 5AY
United Kingdom

Tel: +44(0)1449 765800
E-mail: sales@greenmech.co.uk

GreenMech
The Professionals' Choice

COPYRIGHT GREENMECH LTD.

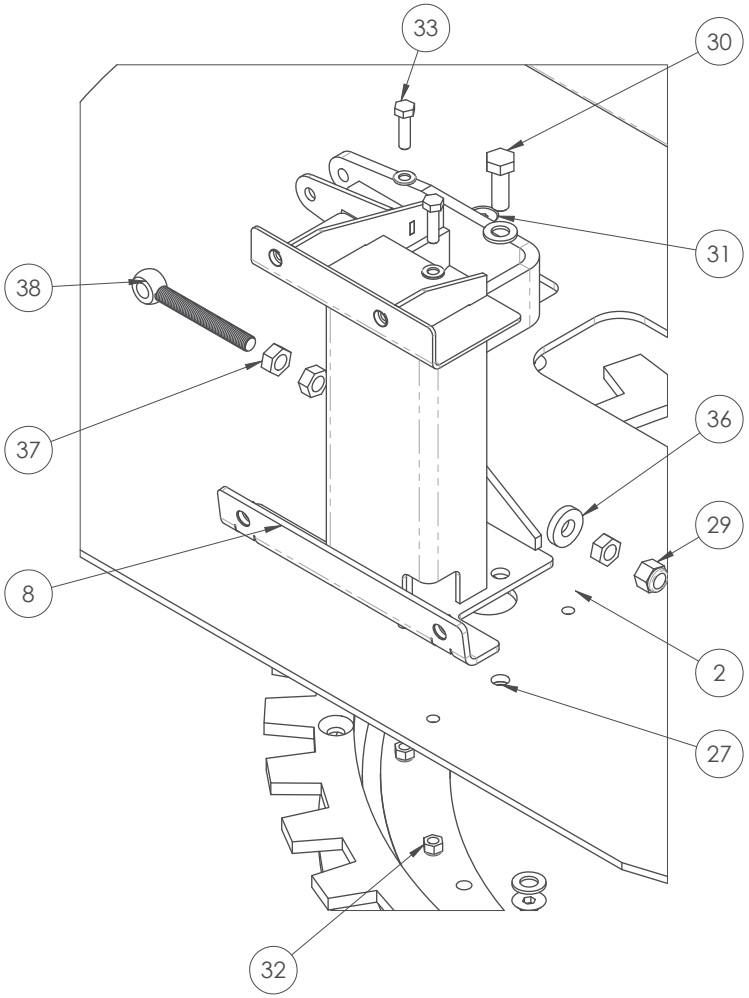

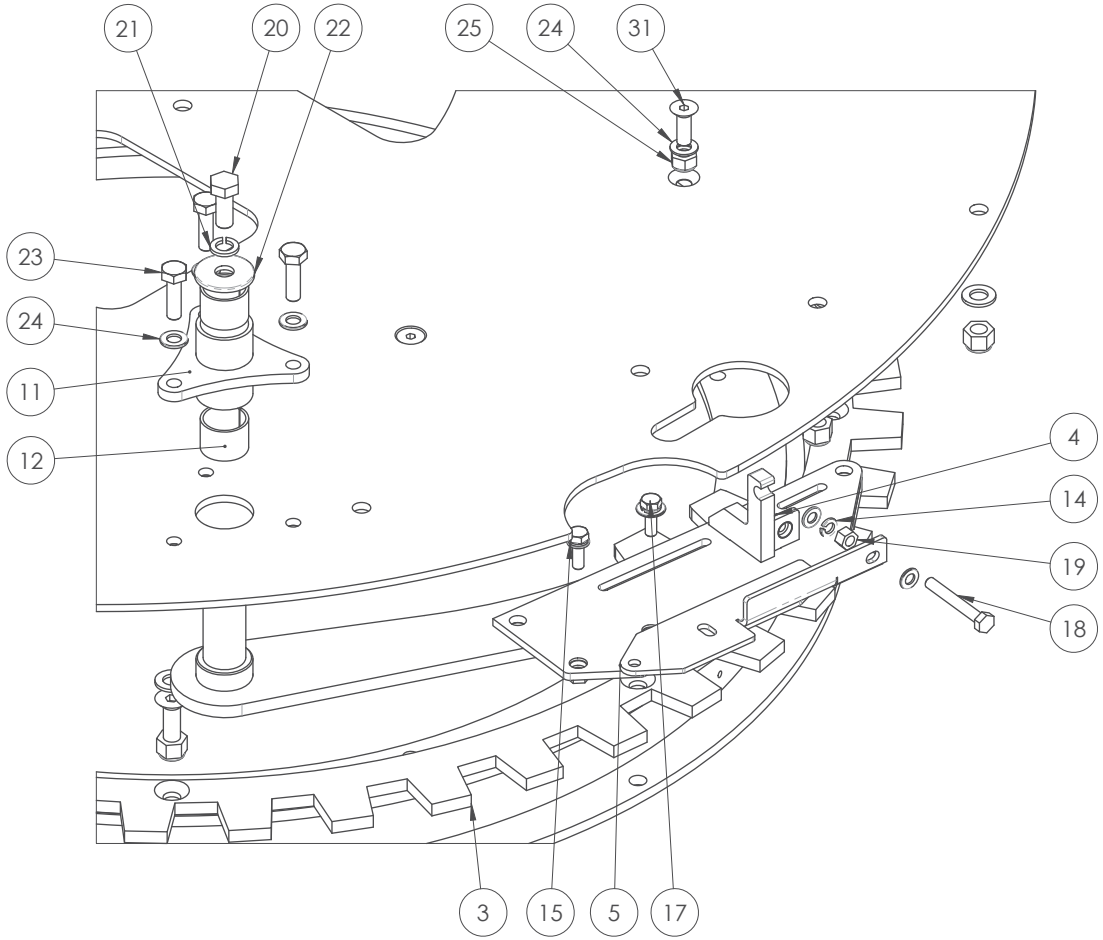

L ☐ R		←
DRAWING NUMBER: 4051597	SHEET NO. 2/2	REVISION: A
DESCRIPTION: EVO205TT TURNTABLE MODULE - STANDARD		

GreenMech Ltd
Tomo Industrial Estate
Stowmarket
Suffolk
IP14 5AY
United Kingdom

Tel: +44(0)1449 765800
E-mail: sales@greenmech.co.uk

GreenMech
The Professionals' Choice

COPYRIGHT GREENMECH LTD.

ITEM NO.	PART NUMBER	REFERENCE NUMBER	DESCRIPTION	QTY.
1	4030320	N/A	STEEL HYDRAULIC TANK FABRICATION	1
2	4018522	N/A	PLASTIC HYDRAULIC TANK CIRCULAR PLATE FABRICATION	1
3	4035679	N/A	1-1/4 BSP PLUG REDUCER	1
4	4001664	MK2 ST1928-1-150	UCC TANK BREATHER	1
5	4002028	DSSC-400-821	1/4 BONDED WASHER	1
6	4001638	STC1928112	TANK GAUGE	1
7	90616S	FASTENERS	M6 X 16 SET	9
8	90603	FASTENERS	M6 SPRING WASHER	9
9	4001633	C200315	SUCTION FILTER	1
10	4006041	DSSC-400-830	1" BONDED WASHER	1
11	4006191	MM-16-12	1" X 3/4" MALE MALE	1
12	4008466	EW33-12-12	3/4 SWIVEL X 3/4 PUSH IN HOSE TAIL 45	2
13	4051825	4035677	3/4 INCH HYDRAULIC SUCTION HOSE	1

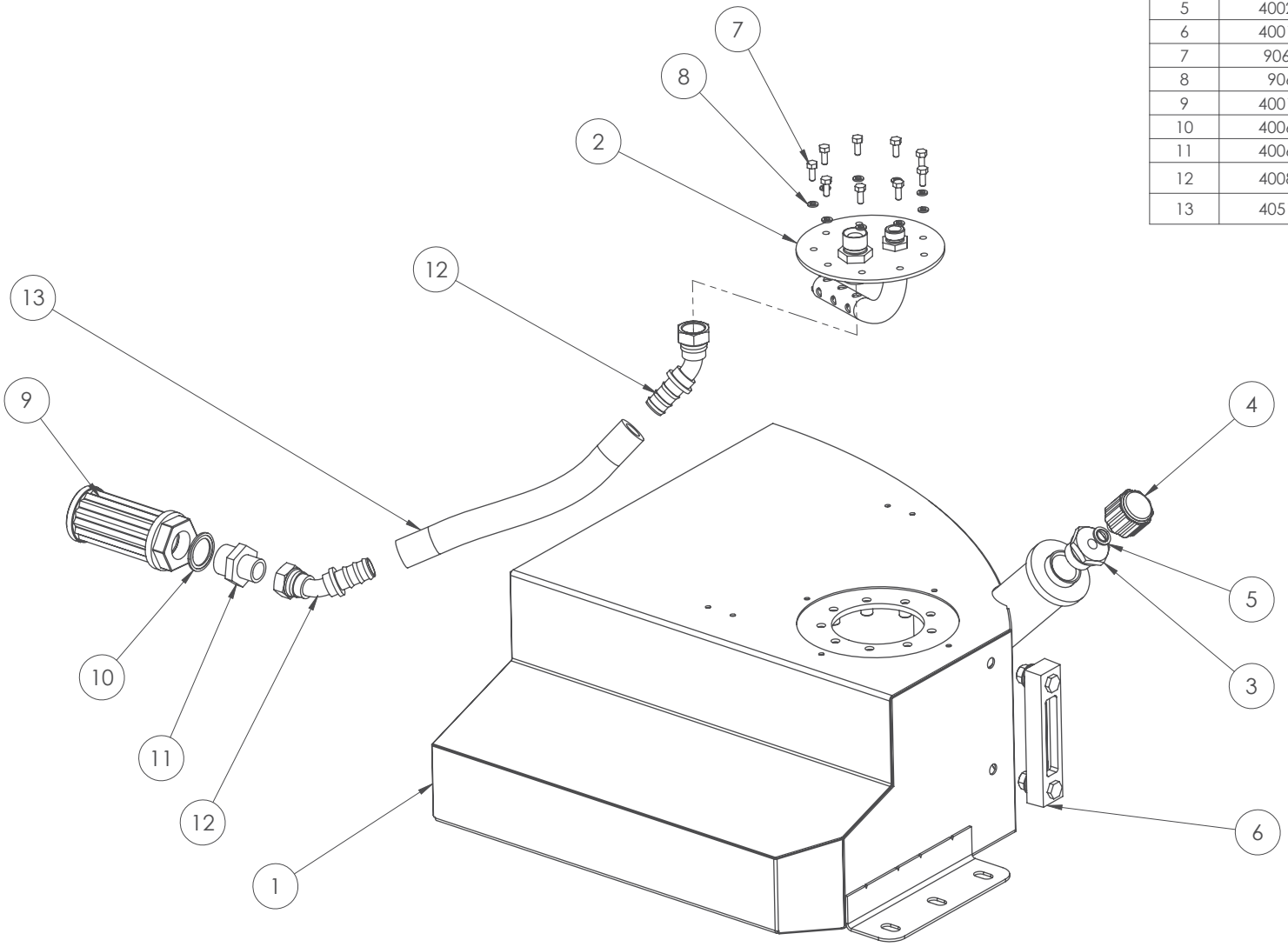

L R

DRAWING NUMBER:	SHEET NO.	REVISION:
4035677	1/1	A

DESCRIPTION:
HYDRAULIC TANK ASSEMBLY

GreenMech Ltd
Tomo Industrial Estate
Stowmarket
Suffolk
IP14 5AY
United Kingdom

Tel: +44(0)1449 765800
E-mail: sales@greenmech.co.uk

GreenMech
The Professionals' Choice

COPYRIGHT GREENMECH LTD.

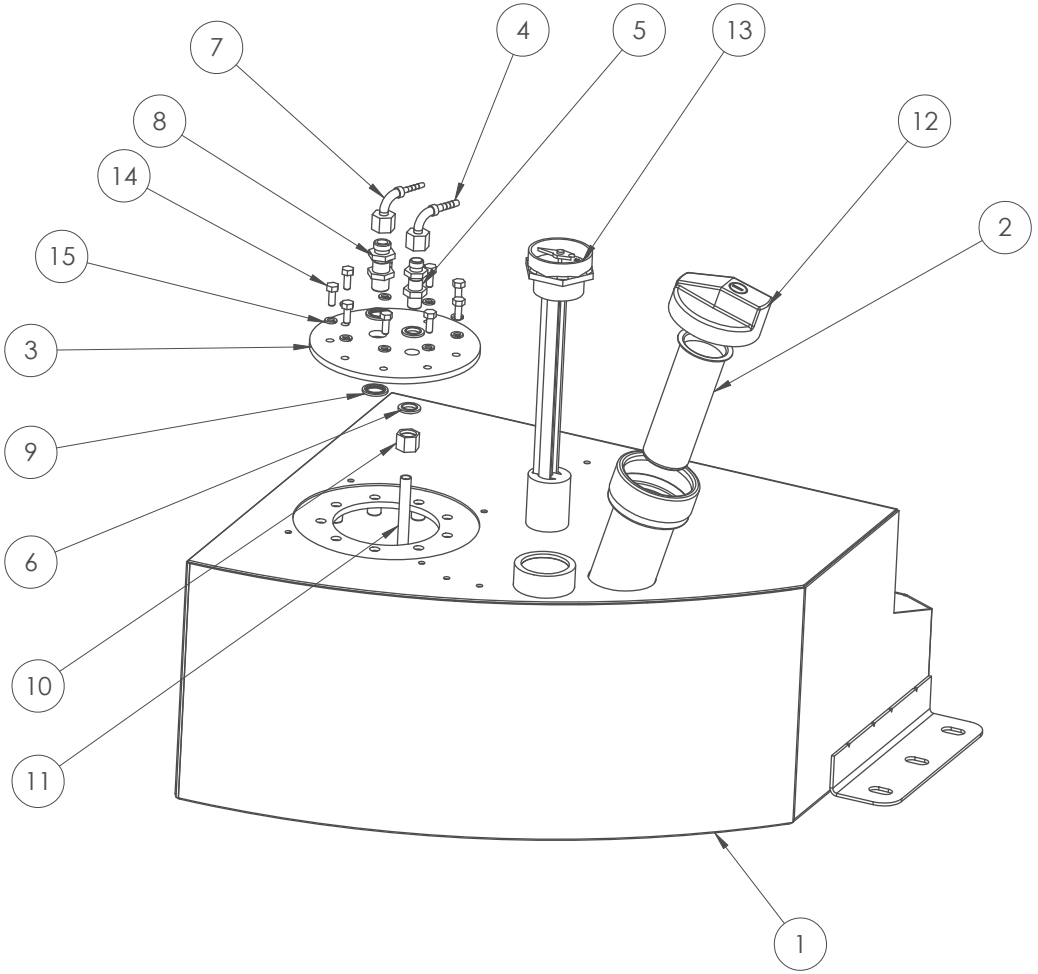

ITEM NO.	PART NUMBER	REFERENCE NUMBER	DESCRIPTION	QTY.
1	4030382	N/A	STEEL FUEL TANK FABRICATION	1
2	4005181	MK2 ST1928-1-206A	FUEL TANK GAUZE FILTER	1
3	4018514	N/A	PLASTIC FUEL TANK CIRCULAR PLATE	1
4	4005993	KW11-05-04	1/4 F-TAIL	1
5	4005997	BH-04-04	14 BHD FITTING	1
6	4002028	DSSC-400-821	1/4 BONDED WASHER	2
7	4006164	MW23-03-04	1/4 SWIVEL FEMALE X 3/16 HOSE TAIL 90'	1
8	4005999	SV10-L-OMD	10MM BULKHEAD	1
9	4001937	DSSC-400-823	3/8 BONDED WASHER	2
10	4005995	FM10-L	10MM OLIVE NUT	1
11	4008762	QC160-1-1036-1	FUEL PIPE	1
12	4033812	900990450	LARGE PLAIN FUEL CAP	1
13	4048136	N/A	FUEL TANK GAUGE	1
14	90616S	FASTENERS	M6 X 16 SET	9
15	90603	FASTENERS	M6 SPRING WASHER	9

L R

DRAWING NUMBER:	SHEET NO.	REVISION:
4035668	1/1	A

DESCRIPTION:
FUEL TANK ASSEMBLY

GreenMech Ltd
Tomo Industrial Estate
Stowmarket
Suffolk
IP14 5AY
United Kingdom

Tel: +44(0)1449 765800
E-mail: sales@greenmech.co.uk

GreenMech
The Professionals' Choice

COPYRIGHT GREENMECH LTD.

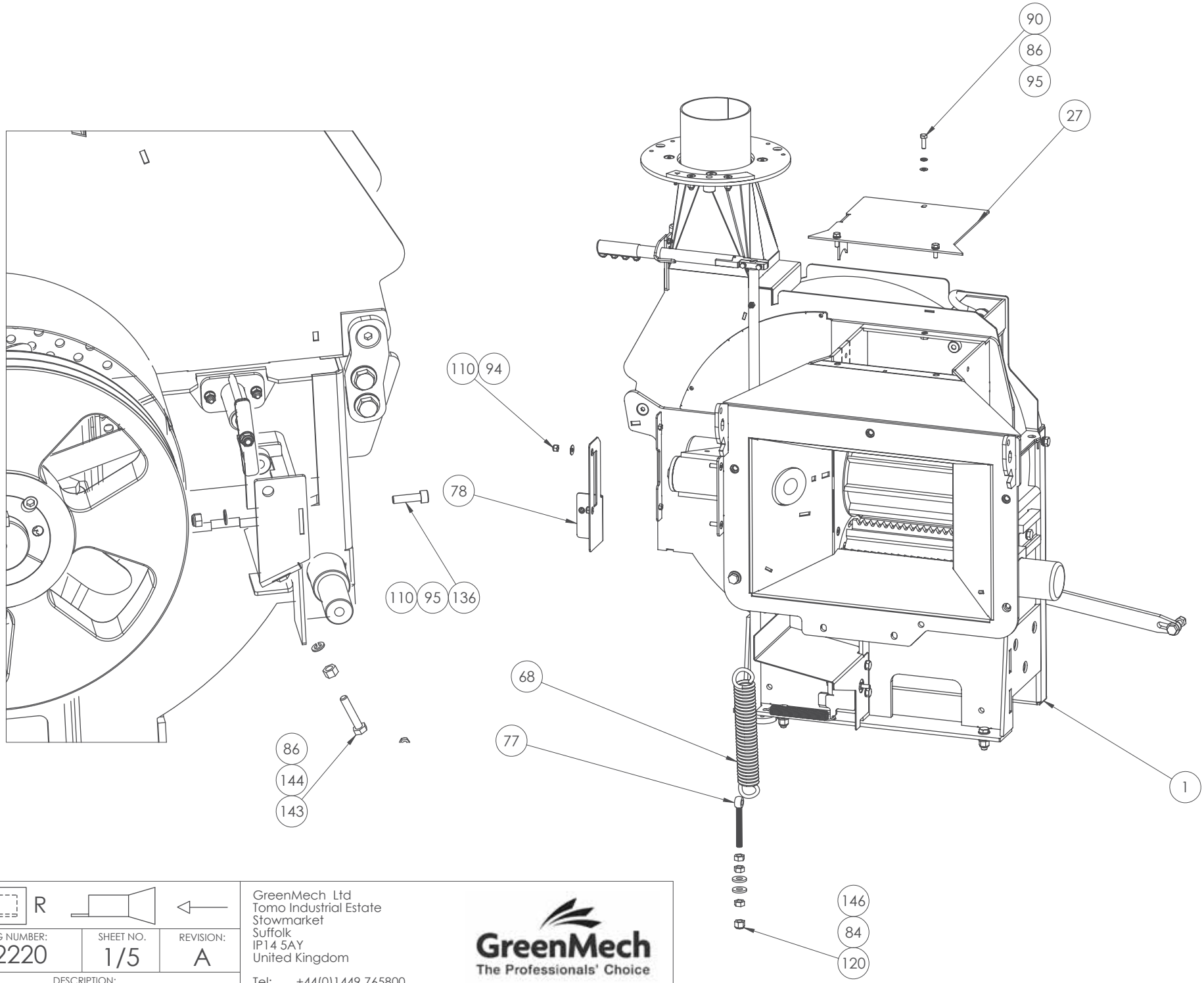

L R		
DRAWING NUMBER: 4042220	SHEET NO. 1/5	REVISION: A
DESCRIPTION: EVO205TT CHIPPER CHAMBER ROLLER BOX MODULE - STANDARD		

GreenMech Ltd
Tomo Industrial Estate
Stowmarket
Suffolk
IP14 5AY
United Kingdom

Tel: +44(0)1449 765800
E-mail: sales@greenmech.co.uk

GreenMech
The Professionals' Choice

COPYRIGHT GREENMECH LTD.

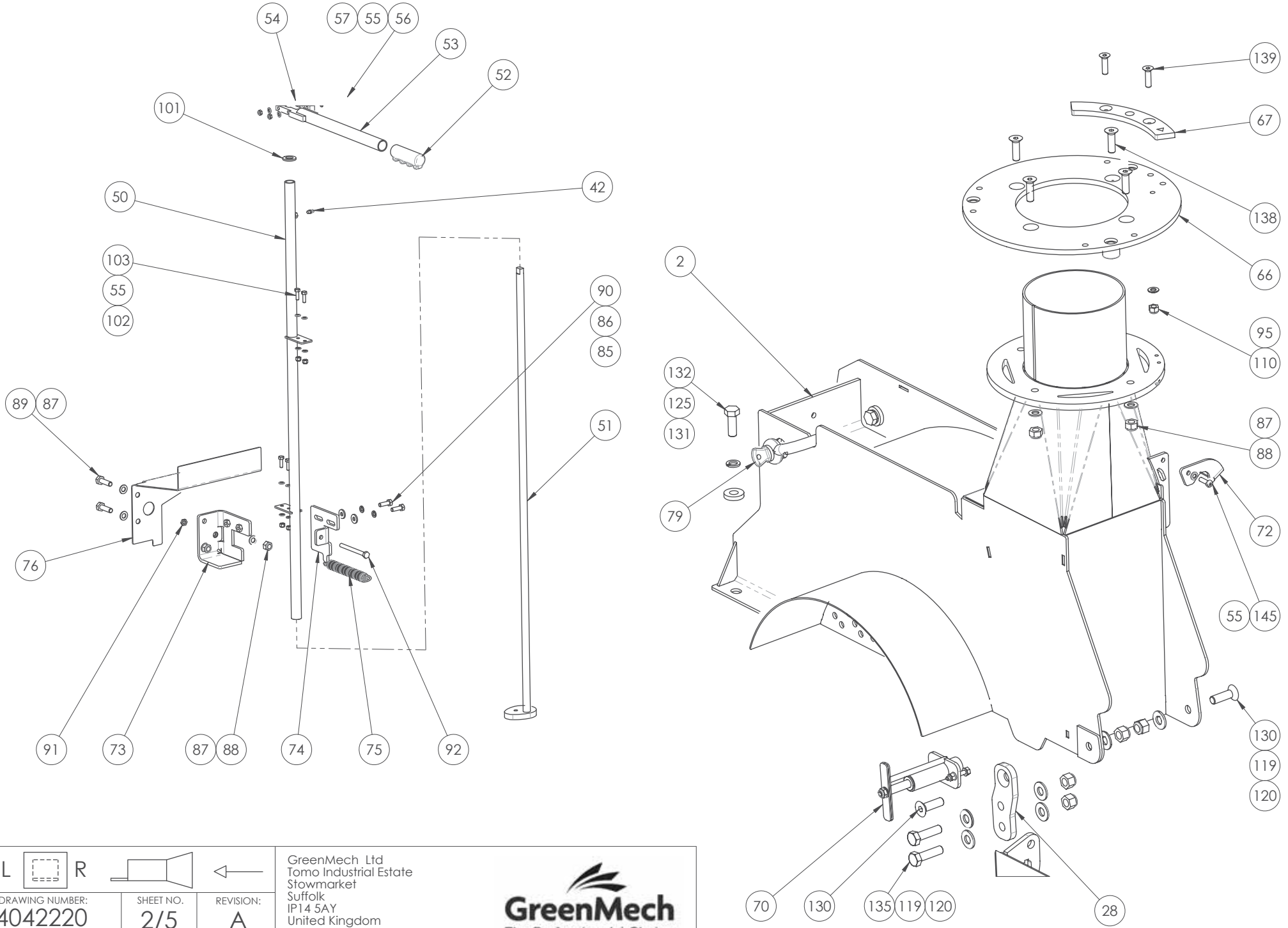

L ☐ R		
DRAWING NUMBER: 4042220	SHEET NO. 2/5	REVISION: A
DESCRIPTION: EVO205TT CHIPPER CHAMBER ROLLER BOX MODULE - STANDARD		

GreenMech Ltd
Tomo Industrial Estate
Stowmarket
Suffolk
IP14 5AY
United Kingdom

Tel: +44(0)1449 765800
E-mail: sales@greenmech.co.uk

GreenMech
The Professionals' Choice

COPYRIGHT GREENMECH LTD.

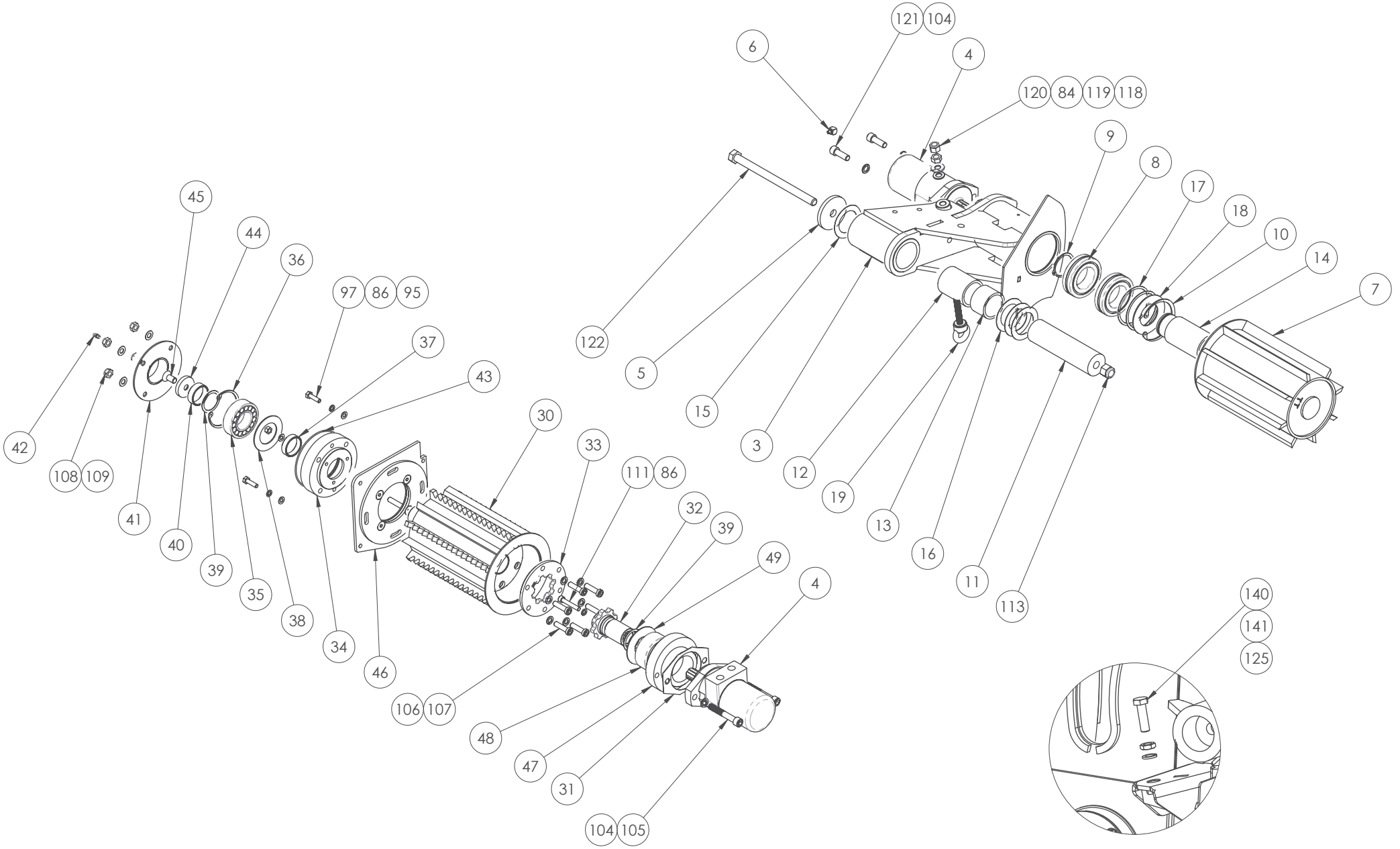

L ▭ R		◁
DRAWING NUMBER: 4042220	SHEET NO. 3/5	REVISION: A
DESCRIPTION: EVO205TT CHIPPER CHAMBER ROLLER BOX MODULE - STANDARD		

GreenMech Ltd
Tomo Industrial Estate
Stowmarket
Suffolk
IP14 5AY
United Kingdom

Tel: +44(0)1449 765800
E-mail: sales@greenmech.co.uk

GreenMech
The Professionals' Choice

COPYRIGHT GREENMECH LTD.

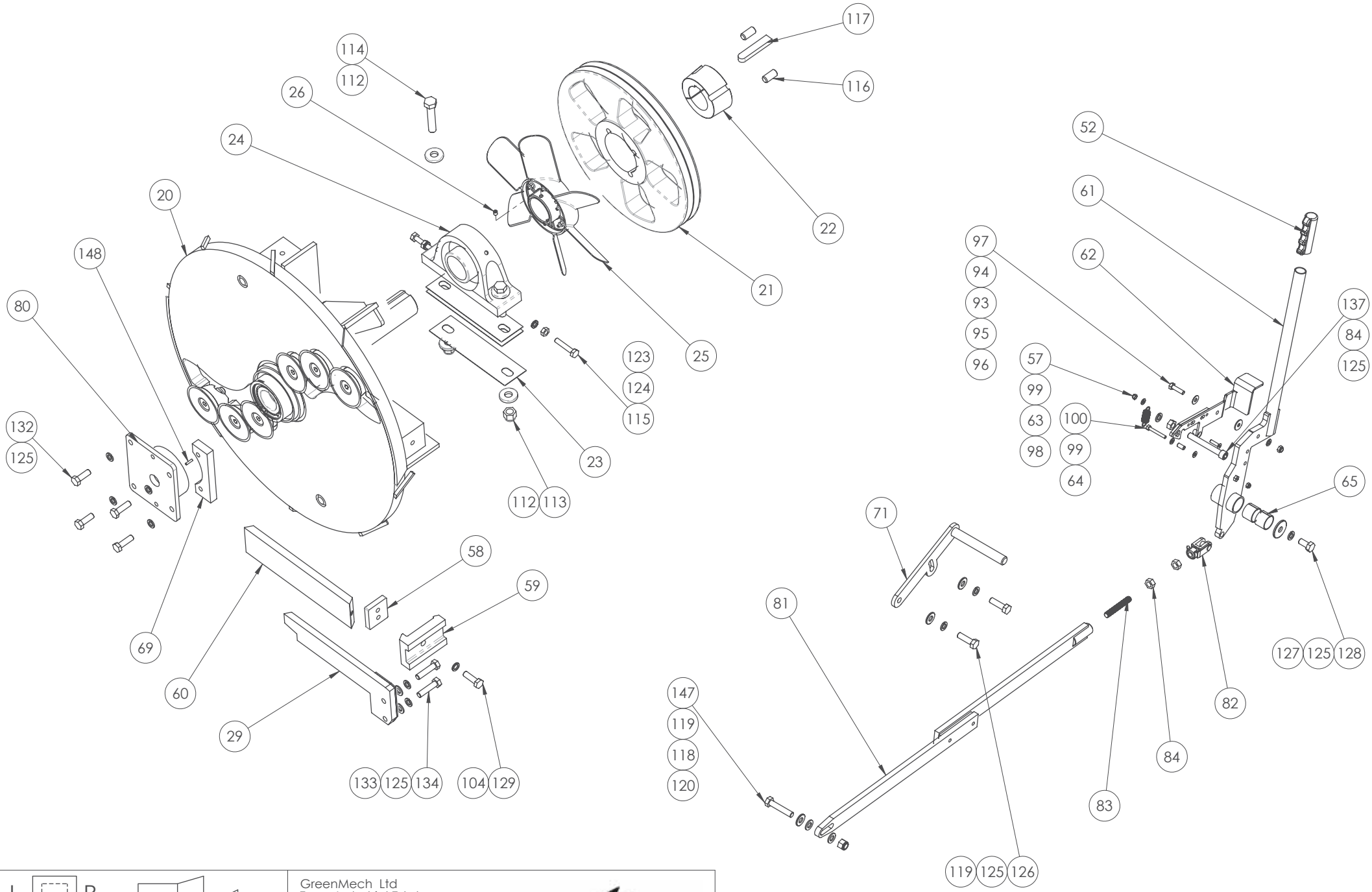

L	R	
DRAWING NUMBER: 4042220	SHEET NO. 4/5	REVISION: A

DESCRIPTION:
EVO205TT CHIPPER CHAMBER ROLLER BOX MODULE - STANDARD

GreenMech Ltd
Tomo Industrial Estate
Stowmarket
Suffolk
IP14 5AY
United Kingdom

Tel: +44(0)1449 765800
E-mail: sales@greenmech.co.uk

GreenMech
The Professionals' Choice

COPYRIGHT GREENMECH LTD.

ITEM NO.	PART NUMBER	REFERENCE NUMBER	DESCRIPTION	QTY.
1	4042223	N/A	CHIPPER CHAMBER ROLLERBOX FABRICATION	1
2	4027802	N/A	CHIPPER CHAMBER TOP FABRICATION	1
3	4027757	N/A	PIVOT ARM FABRICATION	1
4	4001632	C200207-1	HYDRAULIC MOTOR	2
5	4012277	EC1928-3-71	PIVOT WASHER	1
6	4019408	DROPSA 0911093	CONNECTOR 90° INIET. M6 X 1	1
7	4027772	N/A	TOP ROLLER FABRICATION	1
8	4006901	N/A	22210EAC3	2
9	4005950	900890043	50 X 2 EXTERNAL CIRCLIP	1
10	4005948	C252120	INTERNAL CIRCLIP 90 x 2.5	1
11	4012276	EC1928-3-70	PIVOT PIN	1
12	4014967	EC1928113	OILITE BUSH	1
13	4014968	C180114	OILITE BUSH	1
14	4021762	N/A	PIVOT ARM BEARING SPACER	1
15	SH7550.5	N/A	SHIM 75X50X.5	1
16	SH75501	N/A	SHIM 75X50X1	3
17	4002234	EC1928-3-422	SLIDE ROLLER BEARING SHIM	2
18	4012267	EC1928-3-421	TOP ROLLER BEARING END PLATE	1
19	4026340	N/A	M12 LONG SHANK EYE BOLT	1
20	4027786	N/A	730 MM DIAMETER FLYWHEEL, SHAFT & BLADES ASSEMBLY	1
21	4006070	ARB190-9-1002	SPB400 2G FLYWHEEL PULLEY	1
22	4019432	C200508	3020-60 TAPER LOCK	1
23	4019424	N/A	CHAMBER BEARING SHIM	3
24	4019421	N/A	60mm PILLOW BLOCK BEARING NP60	1
25	4038937	N/A	FAN ASSEMBLY	1
26	3088HT	FASTENERS	M8 X 8 GRUBSCREW	2
27	4027771	N/A	ROLLERBOX COVER	1
28	4008561	N/A	CHAMBER TOP HINGE	1
29	4035286	N/A	REMOVABLE SHEAR BAR SUPPORT FABRICATION	1
30	4050254	N/A	BOTTOM FIXED ROLLER FABRICATION	1
31	4013991	N/A	HYDRAULIC MOTOR SHIM	1
32	4050262	N/A	GEAR SPLINE FABRICATION	1
33	4051492	4021680	LARGE GEAR DISC	1
34	4031571	N/A	BOTTOM ROLLER BEARING HOUSING	1
35	4006105	EC1523200	40 ID - 80 OD SPHERICAL BEARING	1
36	4002441	FASTENERS	80 X 2.5 INTERNAL CIRCLIP	1
37	4031587	N/A	BOTTOM ROLLER INNER BEARING SPACER	1
38	4031622	N/A	SEALING SHIM	1
39	SH50401	FASTENER	50X40X1 SHIM	3
40	4032429	N/A	BOTTOM ROLLER INNER BEARING SPACER	1
41	4031585	N/A	BEARING COVER FABRICATION	1
42	4001841	GNS500	GREASE NIPPLE	3
43	4032158	EMI125X02.5N70	BOTTOM BEARING GREASE SEAL	1
44	4037291	N/A	ROLLER SHAFT END DISC	1
45	81225	FASTENERS	M12 X 25 CSK	1
46	4027883	N/A	ROLLER ACCESS PLATE	1
47	4050258	N/A	BEARING HOUSING	1
48	4049910	N/A	80 OD X 40 ID X 30.2 DOUBLE-ROW ANGULAR CONTACT BALL BEARING	1
49	4049918	N/A	BEARING SHIELD	1
50	4035042	N/A	LOCKING TUBE FABRICATION	1
51	4035534	N/A	INDEXING CAM FABRICATION	1
52	4001621	9227	PLASTIC HANDLE GRIP	2
53	4035568	N/A	CAM SHAFT HANDLE FABRICATION	1
54	4048341	N/A	CAM SHAFT HANDLE CLAMP	1
55	90602A	FASTENERS	M6 A WASHER	14
56	90640S	FASTENERS	M6 X 40 SET	2
57	90601T	FASTENERS	M6 THIN NYLOC NUT	5
58	4020112	N/A	SHEAR BAR CLAMP FLOATING BLOCK	1
59	4031533	N/A	DEEP SHEAR BAR MACHINED CLAMP	1
60	4031523	N/A	75 DEEP EVO 205 HORIZONTAL LOWER SHEAR BAR	1
61	4042790	N/A	CLUTCH HANDLE FABRICATION	1
62	4040540	N/A	DE-TENSION HANDLE LATCH FABRICATION	1
63	4010915	E-7707000	EXTENSION SPRING	1
64	4033529	FASTENER	LONG ROLLED SPACER	1
65	4008008	QC160-6-1024	GLACIER BUSH	2
66	4004606	MK2 ST1928-2-88	LOCATION RING FABRICATION	1
67	4044549	N/A	QUADRANT	1
68	4041015	N/A	TOP ROLLER SPRING	1
69	4029479	N/A	18mm VERTICAL INNER SHEAR BAR	1
70	4005092	301020166	FLYWHEEL SPRING BOLT LOCK ASSEMBLY	1
71	4047395	N/A	BELT FINGER FABRICATION	1
72	4035732	N/A	INDEX HANDLE LATCH	1
73	4046722	N/A	ADJUSTABLE SPRING HOOK ANCHOR FABRICATION	1
74	4046720	N/A	ADJUSTABLE SPRING HOOK	1
75	4050281	N/A	INDEX ARM RETURN SPRING T32840	1
76	4049817	N/A	DEBRIS DEFLECTOR	1
77	4002444	QC160-1-1041 / 900930406	SWING BOLT	1
78	4036246	N/A	CHAMBER FRONT PANEL ANCHOR PLATE	1
79	4031106	N/A	3.25T BOW SHACKLE	1
80	4029480	N/A	FLYWHEEL SHAFT RETAINING PLATE	1
81	4046062	N/A	TENSION CONTROL LEVER FABRICATION	1
82	4005938	QC160-6-1018	12 X 24 CLEVIS	1
83	4035029	N/A	M12 X 70 ALL THREAD	1
84	91201P	FASTENERS	M12 PLAIN NUT	7
85	90802HD	N/A	M8 X 20 HD WASHER	2
86	90803	FASTENERS	M8 SPRING WASHER	10
87	91002A	FASTENERS	M10 A WASHER	9
88	91001	FASTENERS	M10 NYLOC NUT	6
89	91035S	FASTENERS	M10 X 35 SET	2
90	90825S	FASTENERS	M8 X 25 SET	5
91	90801PT	FASTENERS	M8 PLAIN THIN NUT	1
92	90890	FASTENERS	M8 X 90	1
93	90802N25	FASTENERS	M8 25MM NYLON WASHER	1
94	90802C	FASTENERS	M8 C WASHER	3
95	90802A	FASTENERS	M8 A WASHER	11
96	90801T	FASTENERS	M8 THIN NYLOC NUT	1
97	90830S	FASTENERS	M8 X 30 SET	4
98	80625	FASTENERS	M6 X 25 CSK	1
99	90602C	FASTENERS	M6 C WASHER	3
100	90645S	FASTENERS	M6 X 45 SET	1
101	91602N30	FASTENERS	M16 30MM NYLON WASHER	1
102	90601	FASTENERS	M6 NYLOC NUT	4
103	90620S	FASTENERS	M6 X 20 SET	4
104	91207	FASTENERS	M12 NORDLOCK WASHER	5
105	71240F	FASTENERS	M12 X 80 x 1.25 CAP	2
106	91003	FASTENERS	M10 SPRING WASHER	7
107	71040LH	FASTENERS	M10 X 40 LOW HEAD CAP	6
108	91001T	FASTENERS	M10 THIN NYLOC NUT	4
109	91002B	FASTENERS	M10 B WASHER	4
110	90801	FASTENERS	M8 NYLOC NUT	6
111	70850	FASTENERS	M8 X 50 CAP	1
112	91602HD40	FASTENERS	M16 40MM HD WASHER	4
113	91601	FASTENERS	M16 NYLOC NUT	3
114	91680SHT	FASTENERS	M16 X 80 10.9 SET	2
115	91055S	FASTENERS	M10 X 55 SET	2
116	5/8 X 1 1/4 GS	5/8 X 1 1/4 GS	TAPERLOCK GRUBSCREW	2
117	K181180	N/A	KEY 18 X 11 X 80	1
118	91202N25	FASTENERS	M12 25MM NYLON WASHER	4
119	91202C	FASTENERS	M12 C WASHER	11
120	91201	FASTENERS	M12 NYLOC NUT	11
121	71235	FASTENERS	M12 X 35 CAP	2
122	916240	FASTENERS	M16 X 240	1
123	91004E	FASTENERS	M10 EXTERNAL SHAKE PROOF WASHER	2
124	91001P	FASTENERS	M10 PLAIN NUT	2
125	91203	FASTENERS	M12 SPRING WASHER	14
126	91240S	FASTENERS	M12 X 40 SET	3
127	91202HD44	FASTENERS	M12 44MM HD WASHER	1
128	91225S	FASTENERS	M12 X 25 SET	1
129	91240F	N/A	M12 X 40 X 1.25	3
130	81240	FASTENERS	M12 X 40 CSK	2
131	91202HD30	FASTENERS	M12 30MM HD WASHER	2
132	91235S	FASTENERS	M12 X 35 SET	6
133	91202A	FASTENERS	M12 A WASHER	10
134	91250	FASTENERS	M12 X 50	2
135	91245S	FASTENERS	M12 X 45 SET	2
136	70830	FASTENERS	M8 X 30 CAP	1
137	71290	FASTENERS	M12 X 90 CAP	1
138	81035	FASTENERS	M10 x 35 CSK	4
139	80830	FASTENERS	M8 X 30 CSK	2
140	91240	FASTENERS	M12 X 40	3
141	91201PT	FASTENERS	M12 PLAIN THIN NUT	1
142	91030S	FASTENERS	M10 X 30 SET	1
143	90840S	FASTENERS	M8 X 40 SET	1
144	90801P	FASTENERS	M8 PLAIN NUT	1
145	60620	FASTENERS	M6 X 20 BUTTON	1
146	91206HD	FASTENERS	12MM HD WASHER	2
147	91260S	FASTENERS	M12 X 60 SET	1
148	CP418	N/A	COILED PIN 4 X 18	1

L  R 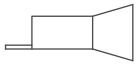 

DRAWING NUMBER:	SHEET NO.	REVISION:
4042220	5/5	A

DESCRIPTION:
EVO205TT CHIPPER CHAMBER ROLLER BOX MODULE - STANDARD

GreenMech Ltd
Tomo Industrial Estate
Stowmarket
Suffolk
IP14 5AY
United Kingdom

Tel: +44(0)1449 765800
E-mail: sales@greenmech.co.uk

GreenMech
The Professionals' Choice

COPYRIGHT GREENMECH LTD.

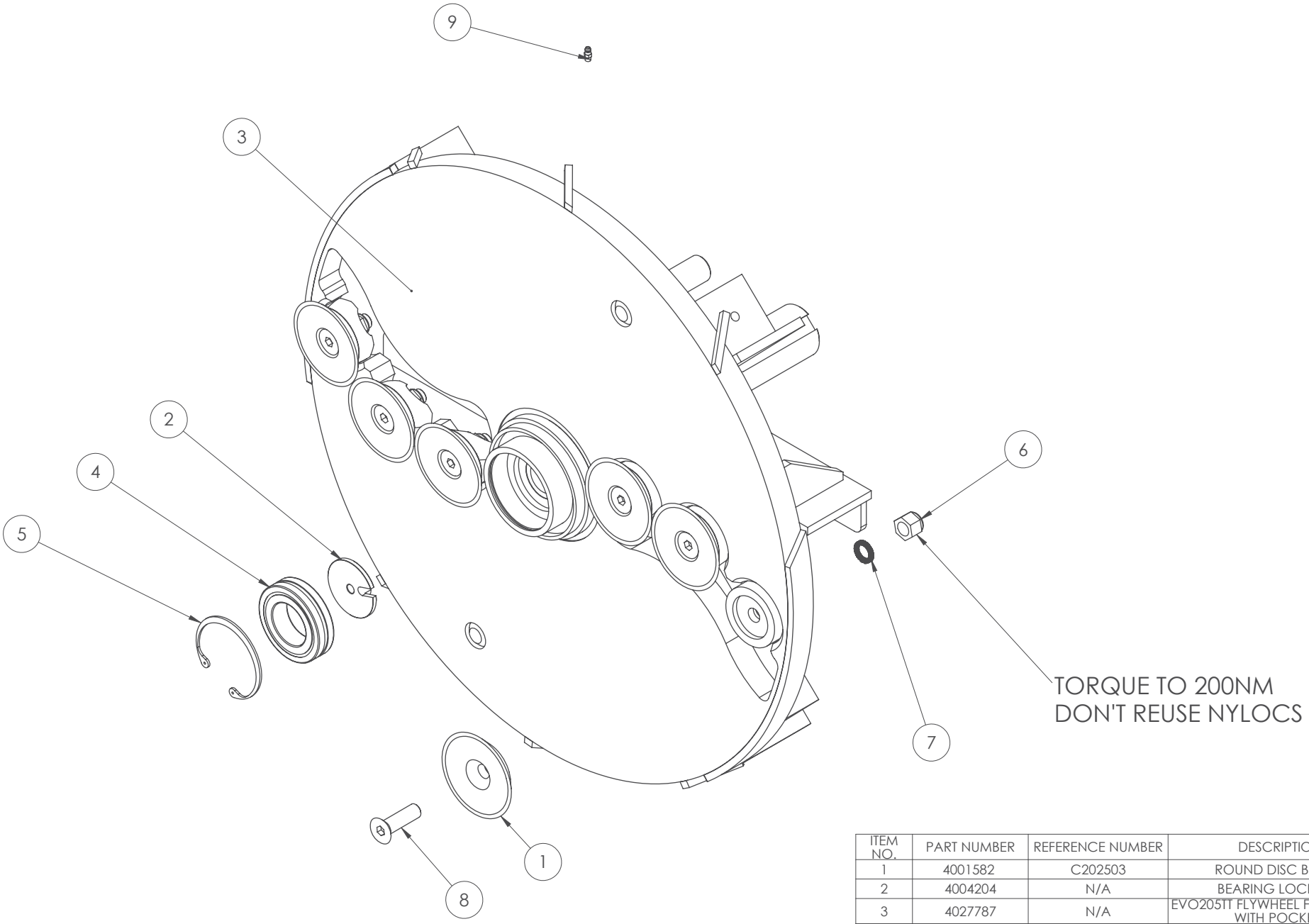

ITEM NO.	PART NUMBER	REFERENCE NUMBER	DESCRIPTION	QTY.
1	4001582	C202503	ROUND DISC BLADE	6
2	4004204	N/A	BEARING LOCK NUT	1
3	4027787	N/A	EVO205TT FLYWHEEL FABRICATION WITH POCKETS	1
4	4006901	N/A	22210EAC3	1
5	4005948	C252120	INTERNAL CIRCLIP 90 x 2.5	1
6	91601	FASTENERS	M16 NYLOC NUT	6
7	91607	FASTENERS	M16 NORDLOCK WASHER	6
8	81655	FASTENERS	M16 X 55 CSK	6
9	4001841	GNS500	GREASE NIPPLE	1

L R

DRAWING NUMBER:	SHEET NO.	REVISION:
4027786	1/1	A

DESCRIPTION:
730 MM DIAMETER FLYWHEEL, SHAFT & BLADES ASSEMBLY

GreenMech Ltd
Tomo Industrial Estate
Stowmarket
Suffolk
IP14 5AY
United Kingdom

Tel: +44(0)1449 765800
E-mail: sales@greenmech.co.uk

GreenMech
The Professionals' Choice

COPYRIGHT GREENMECH LTD.

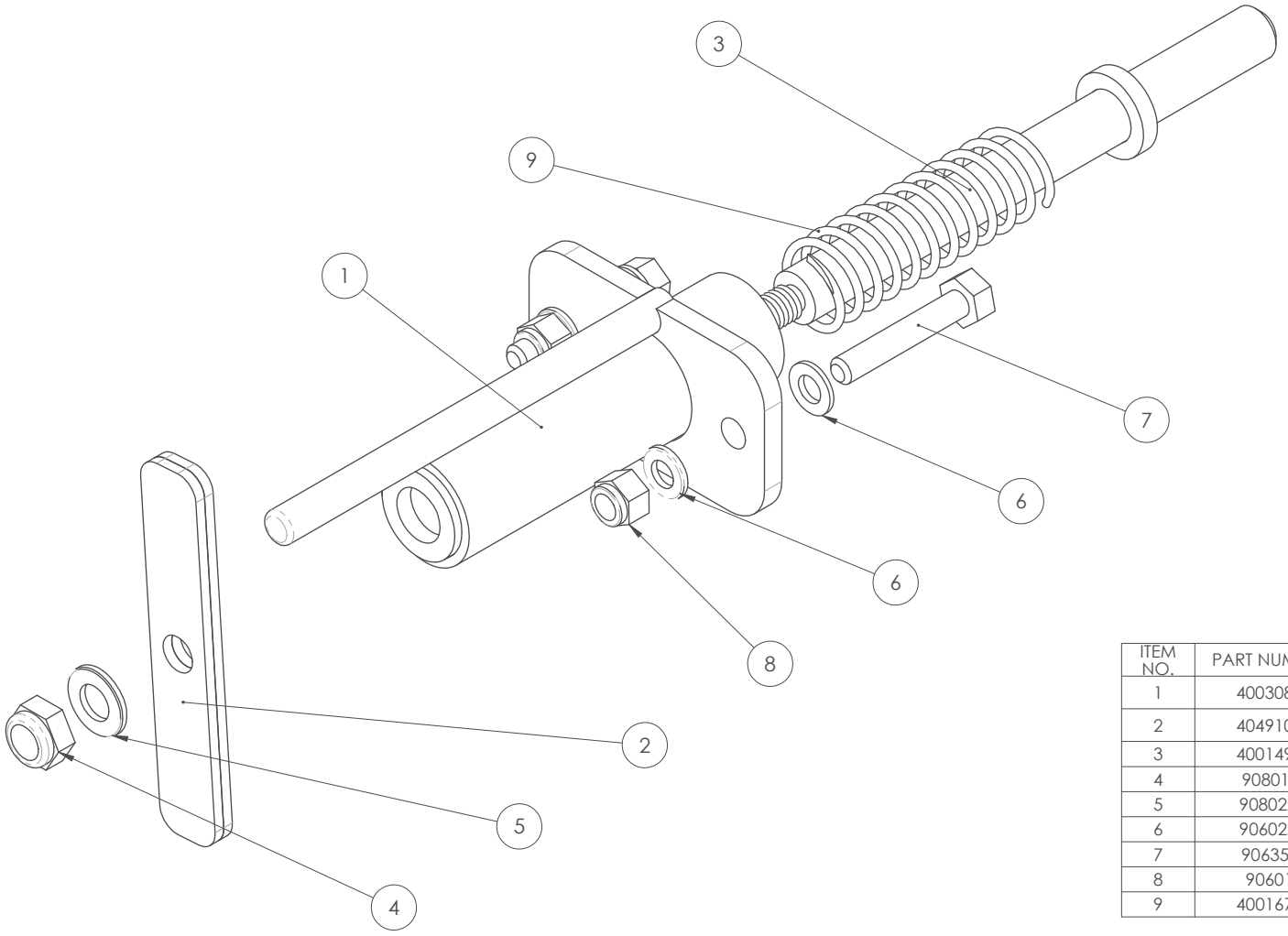

ITEM NO.	PART NUMBER	REFERENCE NUMBER	DESCRIPTION	QTY.
1	4003085	301020065	FLYWHEEL SPRING BOLT LOCK FABRICATION	1
2	4049106	N/A	FLYWHEEL LOCK HANDLE FABRICATION	1
3	4001498	QC160-2-154	LOCKING PIN FABRICATION	1
4	90801T	FASTENERS	M8 THIN NYLOC NUT	1
5	90802A	FASTENERS	M8 A WASHER	1
6	90602A	FASTENERS	M6 A WASHER	4
7	90635S	FASTENERS	M6 X 35 SET	2
8	90601	FASTENERS	M6 NYLOC NUT	2
9	4001676	QC160-2-1008	PLUNGER SPRING	1

L R

DRAWING NUMBER:	SHEET NO.	REVISION:
4005092	1/1	B

DESCRIPTION:
FLYWHEEL SPRING BOLT LOCK ASSEMBLY

GreenMech Ltd
Tomo Industrial Estate
Stowmarket
Suffolk
IP14 5AY
United Kingdom

Tel: +44(0)1449 765800
E-mail: sales@greenmech.co.uk

GreenMech
The Professionals' Choice

COPYRIGHT GREENMECH LTD.

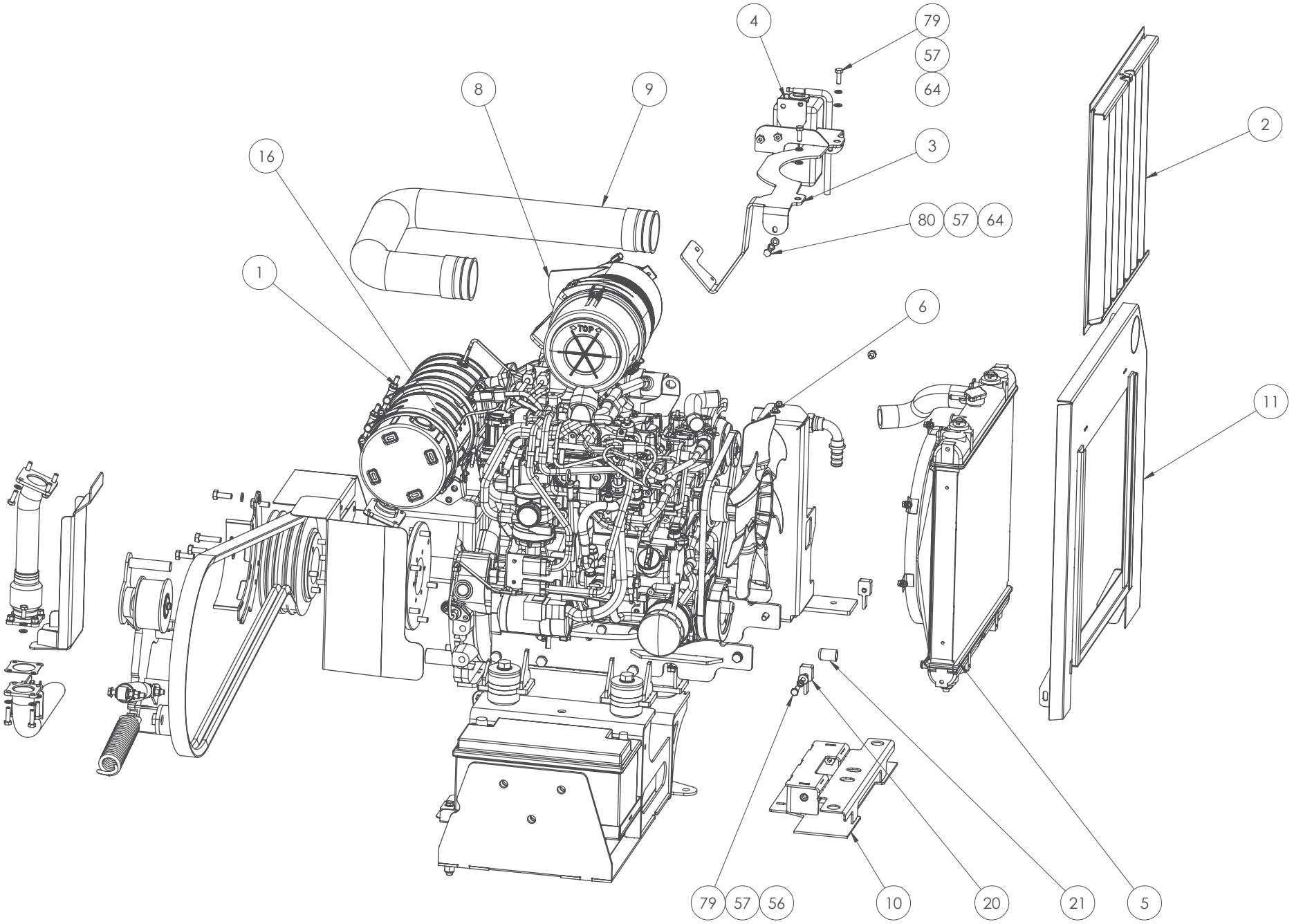

L R		
DRAWING NUMBER: 4042342	SHEET NO. 1/4	REVISION: A
DESCRIPTION: EVO205TT ENGINE MODULE - STANDARD		

GreenMech Ltd
Tomo Industrial Estate
Stowmarket
Suffolk
IP14 5AY
United Kingdom

Tel: +44(0)1449 765800
E-mail: sales@greenmech.co.uk

GreenMech
The Professionals' Choice

COPYRIGHT GREENMECH LTD.

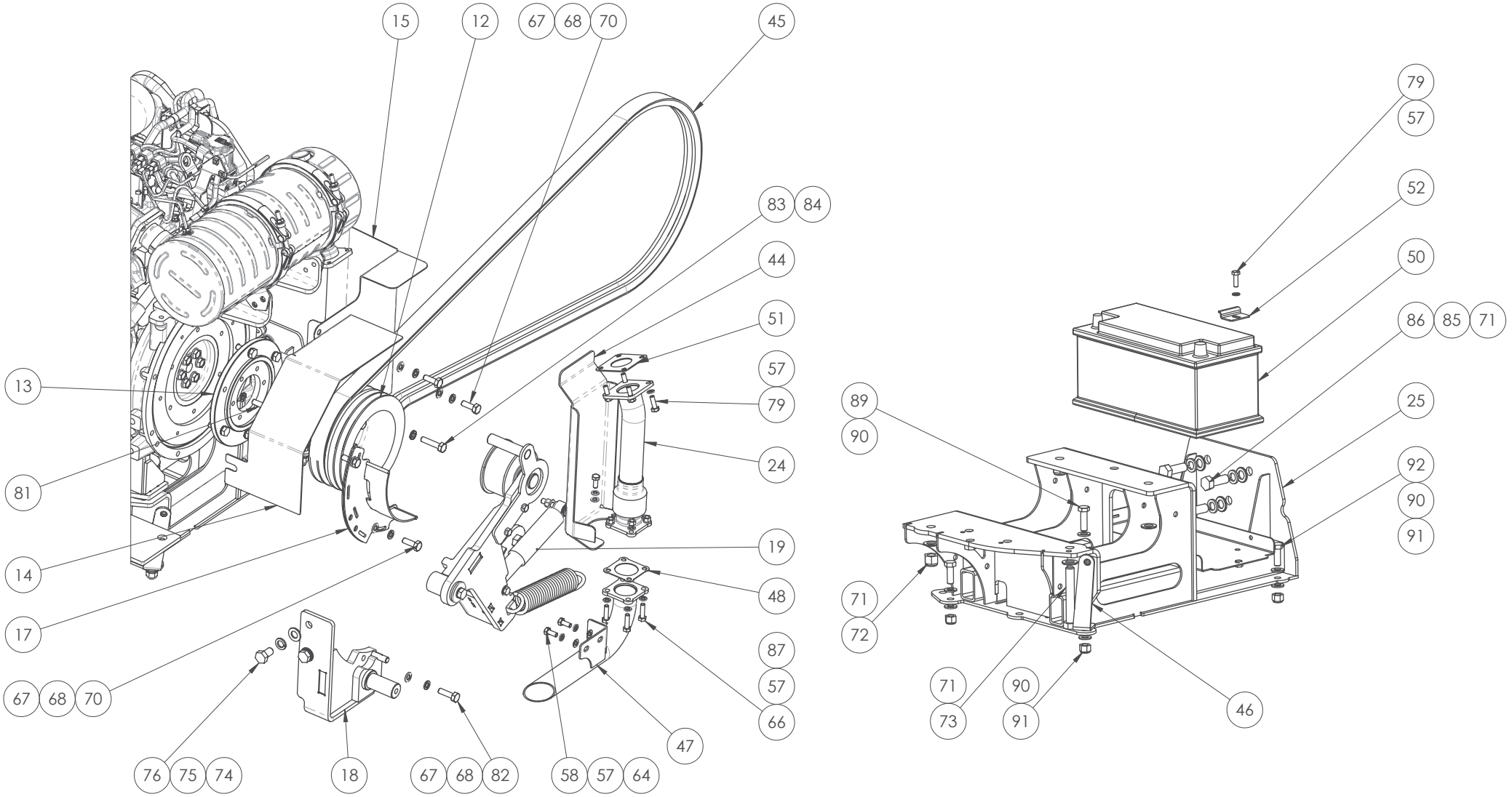

L ☐ R		←
DRAWING NUMBER: 4042342	SHEET NO. 2/4	REVISION: A
DESCRIPTION: EVO205TT ENGINE MODULE - STANDARD		

GreenMech Ltd
Tomo Industrial Estate
Stowmarket
Suffolk
IP14 5AY
United Kingdom

Tel: +44(0)1449 765800
E-mail: sales@greenmech.co.uk

GreenMech
The Professionals' Choice

COPYRIGHT GREENMECH LTD.

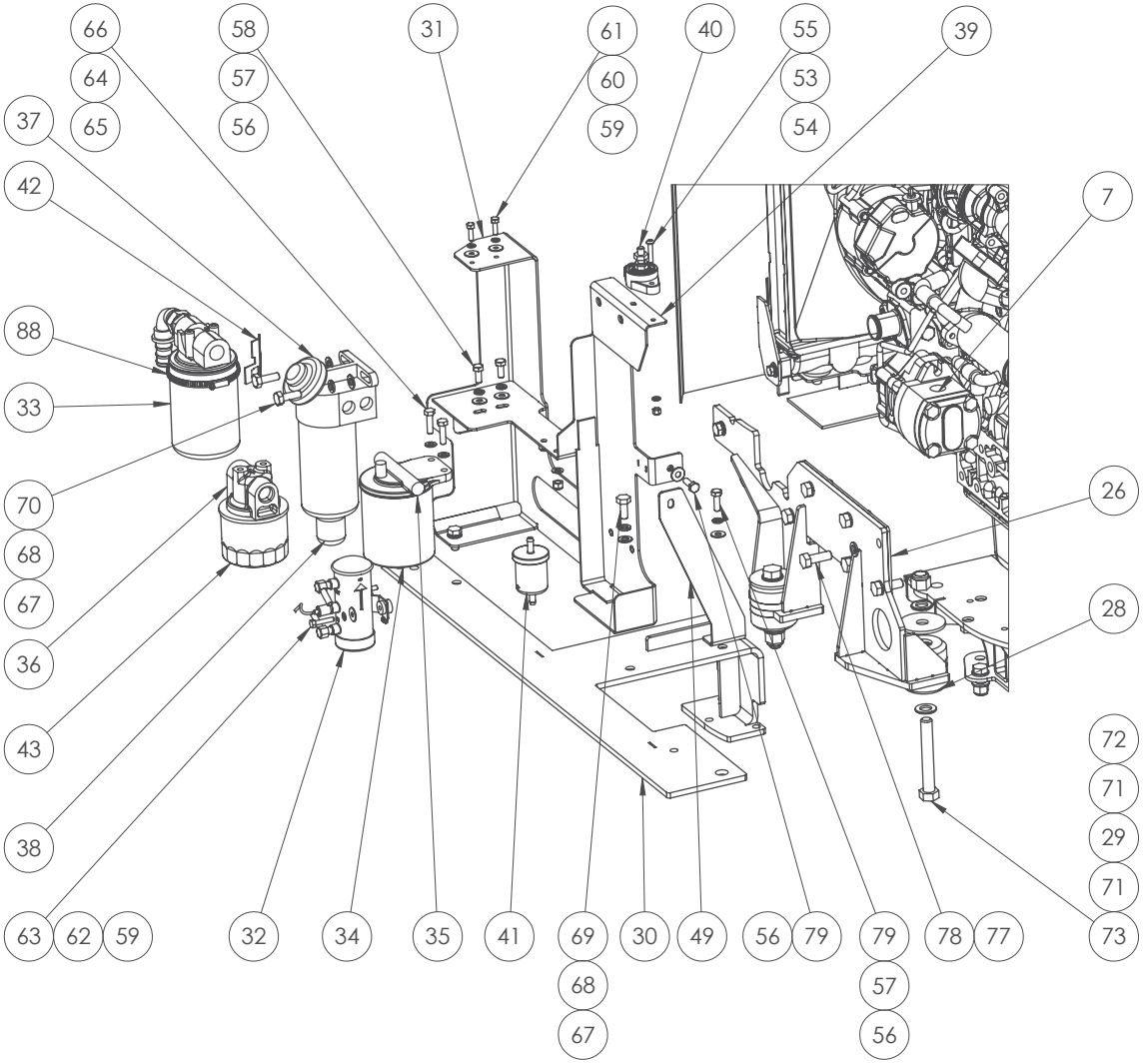

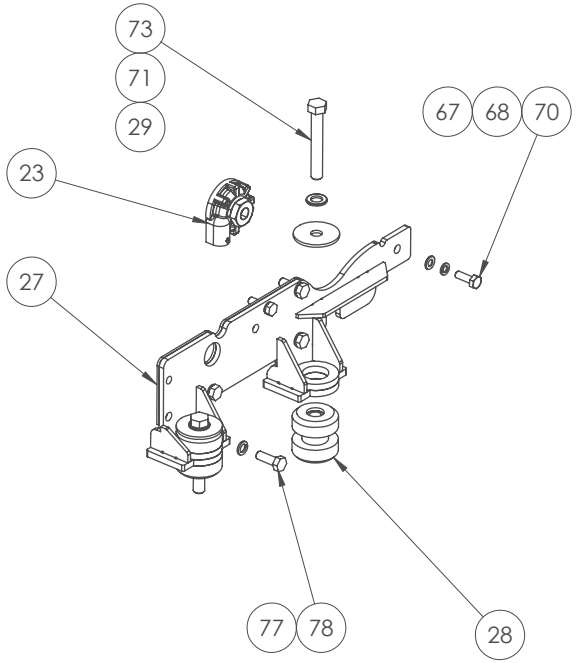

L ▭ R		◁
DRAWING NUMBER: 4042342	SHEET NO. 3/4	REVISION: A
DESCRIPTION: EVO205TT ENGINE MODULE - STANDARD		

GreenMech Ltd
Tomo Industrial Estate
Stowmarket
Suffolk
IP14 5AY
United Kingdom

Tel: +44(0)1449 765800
E-mail: sales@greenmech.co.uk

GreenMech
The Professionals' Choice

COPYRIGHT GREENMECH LTD.

ITEM NO.	PART NUMBER	REFERENCE NUMBER	DESCRIPTION	QTY.
1	4051600	N/A	D1803-CR-TE5B-EU-XP8	1
2	4003141	301060018	RADIATOR SCREEN FABRICATION	1
3	4024103	N/A	RADIATOR TOP BRACKET FABRICATION	1
4	4002665	C170116/ QC160-6-1001-2	EXPANSION BOTTLE	1
5	4024092	W26EK00613	KUBOTA RAD KIT W26EK00613	1
6	4024091	W26EK00583	KUBOTA RAD FAN W26EK0058E	1
7	4026140	N/A	9cc SAE A HYDRAULIC PUMP	1
8	4026329	N/A	AIR FILTER D1803-CR-TE5B-EU-XP8	1
9	4029872	N/A	3 INCH FLEXI AIR HOSE 1 METER LONG	1
10	4035057	N/A	RADIATOR SUPPORT MOUNT FABRICATION	1
11	4037106	N/A	COLD COMPARTMENT FABRICATION	1
12	4023130	N/A	ENGINE PULLEY	1
13	4016956	N/A	PULLEY REGISTER PLATE	1
14	4041498	N/A	REAR DRIVE PULLEY GUARD	1
15	4041563	N/A	ENGINE HARNESS SHIELD	1
16	4045318	N/A	DPF SENSOR EXTENSION BRACKET	1
17	4040228	N/A	DRIVE BELT LOWER WRAP FABRICATION	1
18	4046012	N/A	ENGINE MOUNT IDLER PIVOT	1
19	4046009	N/A	CLUTCH ROCKER ARM ASSEMBLY	1
20	4047937	4026019	COLD COMPARTMENT LOWER MOUNT SPACERS	2
21	4030638	N/A	16mm RADIATOR RUBBER BLANKING CAP	1
22	4033489	1E69665012	KUBOTA WIRING HARNESS	1
23	4037465	N/A	OIL FILTER REMOTE ADAPTOR	1
24	4035318	N/A	EXHAUST DOWPIPE FABRICATION	1
25	4050112	N/A	ENGINE MOUNT SUPPORT FRAME FABRICATION	1
26	4050117	N/A	OUTER ENGINE MOUNT LEG FABRICATION	1
27	4050128	N/A	RIGHT ENGINE MOUNT LEG FABRICATION	1
28	4050111	TP6523-N70	REINFORCED TWO PIECE MOUNT	4
29	4050153	N/A	ENGINE MOUNT WASHER	4
30	4042968	N/A	ENGINE SIDE PANEL SUPPORT FABRICATION	1
31	4037145	N/A	PUMP AND FILTER MOUNT FABRICATION	1
32	4033442	N/A	TRANSISTOR FUEL PUMP	1
33	4019253	C180106	RETURN FILTER	1
34	4024381	N/A	KUBOTA FUEL FILTER	1
35	4024380	N/A	KUBOTA FUEL FILTER KIT	1
36	4037468	1G905-3261	OIL FILTER REMOTE BASE	1
37	4024371	1E78643350	FUEL FILTER HOUSING	1
38	4024373	N/A	FUEL FILTER	1
39	4046276	N/A	REMOTE POSITIVE MOUNTING BRACKET	1
40	4048031	PDP121	POWER DISTIBUTION POST	1
41	4041783	1258143013	INLINE FUEL FILTER	1
42	4048740	N/A	HYDRAULIC OIL FILTER ANTI LOOSEN DEVICE	1
43	4016797	N/A	OIL FILTER	1
44	4035942	4046796	BELT GUARD	1

ITEM NO.	PART NUMBER	REFERENCE NUMBER	DESCRIPTION	QTY.
45	4049209	N/A	SPB 2800 DOUBLE BELT	1
46	4051413	N/A	PANEL MOUNT BRACKET FABRICATION	1
47	4043138	N/A	LOWER EXHAUST PIPE FABRICATION	1
48	4001687	SI20021	EXHAUST GASKET	1
49	4048741	N/A	FILTER BRACKET BRACE	1
50	4020355	N/A	88 Ah BATTERY	1
51	4032294	D1803 KUBOTA	D1803 EXHAUST GASKET	1
52	4028348	N/A	BATTERY CLAMP FOOT	1
53	90602A	FASTENERS	M6 A WASHER	4
54	90601	FASTENERS	M6 NYLOC NUT	2
55	60630	FASTENERS	M6 X 30 BUTTON	2
56	90802C	FASTENERS	M8 C WASHER	7
57	90803	FASTENERS	M8 SPRING WASHER	23
58	90820S	FASTENERS	M8 X 20 SET	6
59	90602R20	FASTENERS	M6 20mm OD WASHER	4
60	90603	FASTENERS	M6 SPRING WASHER	2
61	90620S	FASTENERS	M6 X 20 SET	2
62	90604	FASTENERS	M6 SHAKE PROOF WASHER	2
63	90630S	FASTENERS	M6 X 30 SET	2
64	90802A	FASTENERS	M8 A WASHER	15
65	90801	FASTENERS	M8 NYLOC NUT	3
66	90830S	FASTENERS	M8 X 30 SET	6
67	91002A	FASTENERS	M10 A WASHER	11
68	91003	FASTENERS	M10 SPRING WASHER	12
69	91025S	FASTENERS	M10 X 25 SET	2
70	91030S	FASTENERS	M10 X 30 SET	8
71	91602A	FASTENERS	M16 A WASHER	11
72	91601	FASTENERS	M16 NYLOC NUT	4
73	916110	FASTENERS	M16 X 110	4
74	91402A	FASTENERS	M14 A WASHER	2
75	91403	FASTENERS	M14 SPRING WASHER	2
76	91425F	FASTENERS	M14 X 25 X 1.5	2
77	91203	FASTENERS	M12 SPRING WASHER	10
78	91235SF	FASTENERS	M12 X 35 X 1.25 SET	10
79	90825S	FASTENERS	M8 X 25 SET	11
80	90816S	FASTENERS	M8 X 16 SET	2
81	91035SFP	FASTENERS	M10 X 35 X 1.25 SET	7
82	91035S	FASTENERS	M10 X 35 SET	1
83	91045SFP	FASTENERS	M10 X 45 X 1.25 SET	6
84	91004E	FASTENERS	M10 EXTERNAL SHAKE PROOF WASHER	12
85	91603	FASTENERS	M16 SPRING WASHER	3
86	91645S	FASTENERS	M16 X 45 SET	3
87	90801P	FASTENERS	M8 PLAIN NUT	4
88	4049163	FASTENERS	HOSE CLIP 90 - 110	1
89	91240	FASTENERS	M12 X 40	1
90	91202A	FASTENERS	M12 A WASHER	6
91	91201	FASTENERS	M12 NYLOC NUT	3
92	91235S	FASTENERS	M12 X 35 SET	2

L R

DRAWING NUMBER:	SHEET NO.	REVISION:
4042342	4/4	A

DESCRIPTION:
EVO205TT ENGINE MODULE - STANDARD

GreenMech Ltd
Tomo Industrial Estate
Stowmarket
Suffolk
IP14 5AY
United Kingdom

Tel: +44(0)1449 765800
E-mail: sales@greenmech.co.uk

GreenMech
The Professionals' Choice

COPYRIGHT GREENMECH LTD.

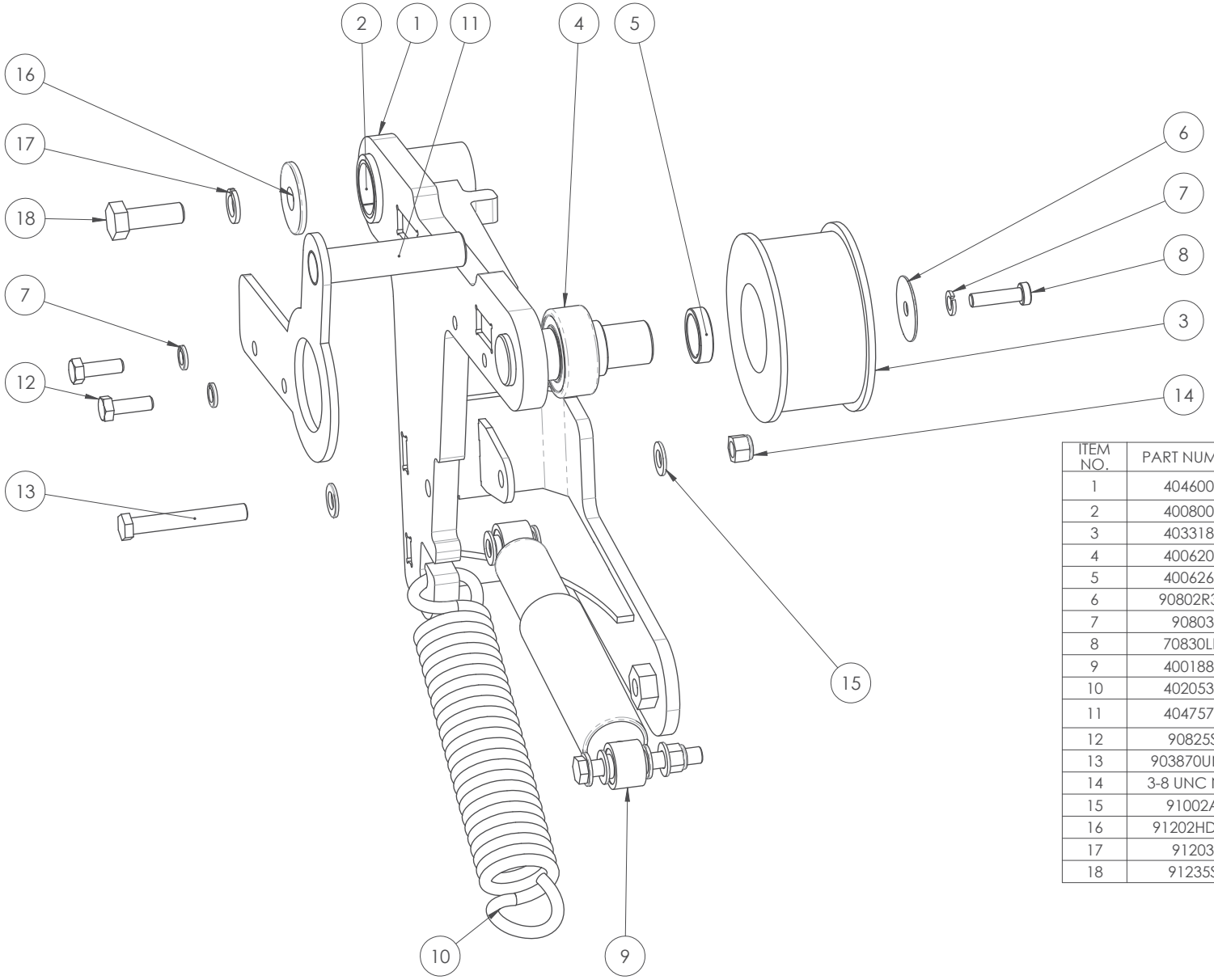

ITEM NO.	PART NUMBER	REFERENCE NUMBER	DESCRIPTION	QTY.
1	4046008	N/A	CLUTCH ROCKER ARM FABRICATION	1
2	4008008	QC160-6-1024	BRONZE BUSH	2
3	4033188	N/A	TENSIONER PULLEY	1
4	4006208	C252121	3205ZZ BEARING	2
5	4006264	QC160-6-94	BEARING SPACER	2
6	90802R38	FASTENERS	M8 38MM REPAIR WASHER	1
7	90803	FASTENERS	M8 SPRING WASHER	3
8	70830LH	FASTENERS	M8 X 30 CAP LOW HEAD	1
9	4001889	QC160-6-1022	DAMPER	1
10	4020530	EC130-3-46	ROLLER SPRING	1
11	4047570	N/A	TENSION ARM BELT RETAINER FABRICATION	1
12	90825S	FASTENERS	M8 X 25 SET	2
13	903870UNC	N/A	3/8 UNC X 2 3/4 HEX	2
14	3-8 UNC NUT	FASTENERS	3-8 UNC NUT	2
15	91002A	FASTENERS	M10 A WASHER	8
16	91202HD44	FASTENERS	M12 44MM HD WASHER	1
17	91203	FASTENERS	M12 SPRING WASHER	1
18	91235S	FASTENERS	M12 X 35 SET	1

L R

DRAWING NUMBER:	SHEET NO.	REVISION:
4046009	1/1	A

DESCRIPTION:
CLUTCH ROCKER ARM ASSEMBLY

GreenMech Ltd
Tomo Industrial Estate
Stowmarket
Suffolk
IP14 5AY
United Kingdom

Tel: +44(0)1449 765800
E-mail: sales@greenmech.co.uk

GreenMech
The Professionals' Choice

COPYRIGHT GREENMECH LTD.

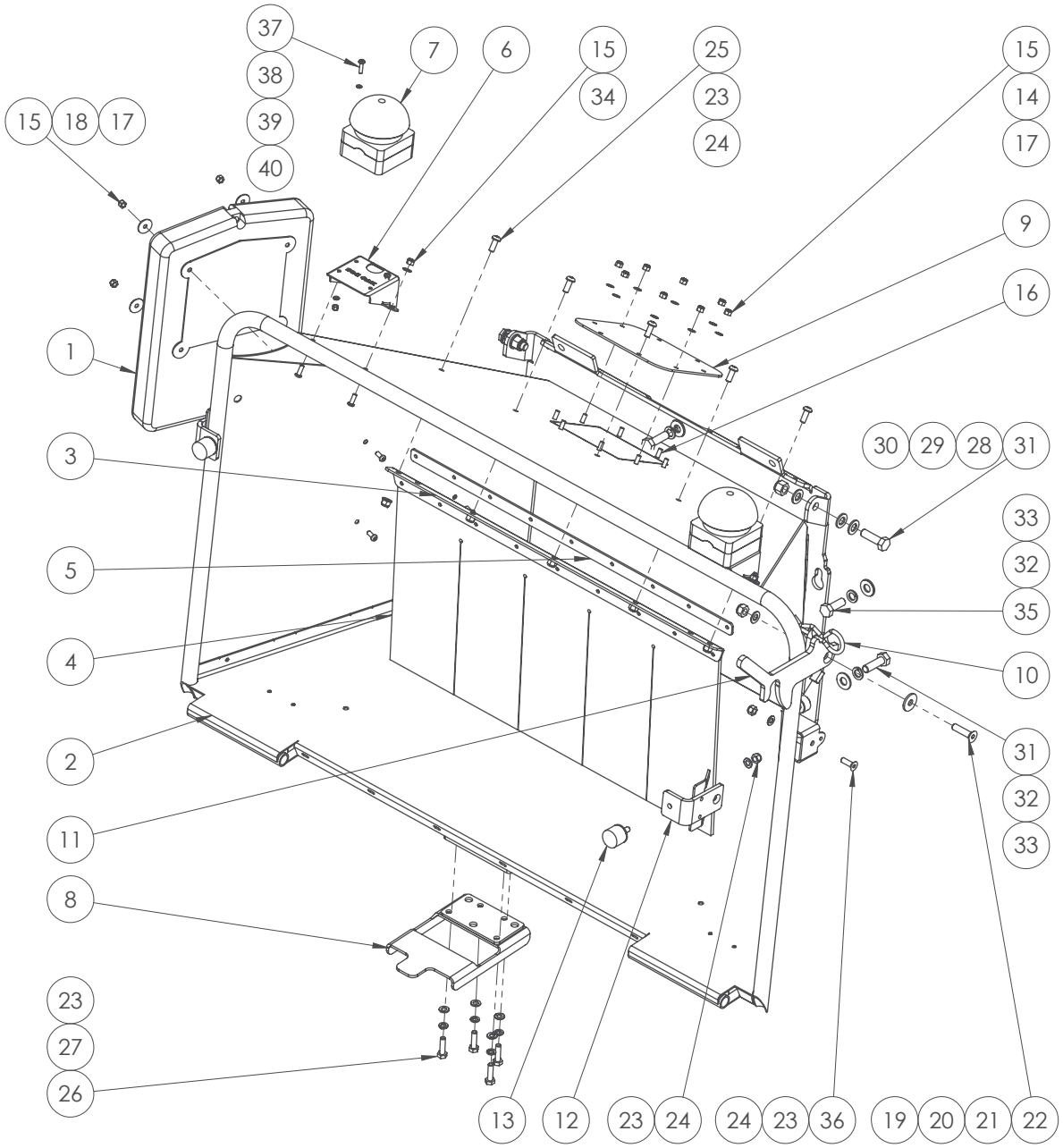

ITEM NO.	PART NUMBER	REFERENCE NUMBER	DESCRIPTION	QTY.
1	4001630	C170409	DOCUMENT CASE	1
2	4024616	N/A	SHORT OFFSET INFEED CHUTE FABRICATION	1
3	4024603	315040048	CURTAIN STRIP	1
4	4002212	315040050	PVC SCREEN	1
5	4024617	315040049	CURTAIN CLAMP	1
6	4021817	N/A	EMERGENCY STOP MOUNT FABRICATION	2
7	4002925	CS100-6-23	E STOP KILL SWITCH ASSEMBLY	2
8	4024344	N/A	FLAP STOP PLATE FABRICATION	1
9	4032344	N/A	INFEED LAMP ACCESS COVER PLATE	1
10	4008781	9105	LARGE R CLIP	1
11	4035917	N/A	EXTENDED FLAP LATCH	1
12	4039671	N/A	BUFFER BRACKET FABRICATION	2
13	4005076	900930053	BUMPSTOP 3025-OEO	2
14	90602B	FASTENERS	M6 B WASHER	8
15	90601	FASTENERS	M6 NYLOC NUT	16
16	60620	FASTENERS	M6 X 20 BUTTON	2
17	60616	FASTENERS	M6 X 16 BUTTON	14
18	90602R25	FASTENERS	M6 25mm OD WASHER	4
19	91001	FASTENERS	M10 NYLOC NUT	1
20	91002A	FASTENERS	M10 A WASHER	1
21	91002N30	FASTENERS	M10 30MM NYLON WASHER	1
22	81040	FASTENERS	M10 X 40 CSK	1
23	90802A	FASTENERS	M8 A WASHER	13
24	90801	FASTENERS	M8 NYLOC NUT	9
25	60820	FASTENERS	M8 X 20 BUTTON	5
26	90830S	FASTENERS	M8 X 30 SET	4
27	90803	FASTENERS	M8 SPRING WASHER	4
28	91202A	FASTENERS	M12 A WASHER	4
29	91202N25	FASTENERS	M12 25MM NYLON WASHER	2
30	91201	FASTENERS	M12 NYLOC NUT	2
31	91240S	FASTENERS	M12 X 40 SET	6
32	91203	FASTENERS	M12 SPRING WASHER	6
33	91202C	FASTENERS	M12 C WASHER	6
34	90602C	FASTENERS	M6 C WASHER	4
35	91235S	FASTENERS	M12 X 35 SET	2
36	80825	FASTENERS	M8 X 25 CSK	2
37	60520	FASTENERS	M5 X 20 BUTTON	4
38	90504	FASTENERS	M5 SHAKE PROOF WASHER	4
39	90502A	FASTENERS	M5 A WASHER	4
40	90501	FASTENERS	M5 NYLOC NUT	4

L R

DRAWING NUMBER:	SHEET NO.	REVISION:
4035949	1/1	A

DESCRIPTION:
INFEED CHUTE ASSEMBLY

GreenMech Ltd
Tomo Industrial Estate
Stowmarket
Suffolk
IP14 5AY
United Kingdom

Tel: +44(0)1449 765800
E-mail: sales@greenmech.co.uk

GreenMech
The Professionals' Choice

COPYRIGHT GREENMECH LTD.

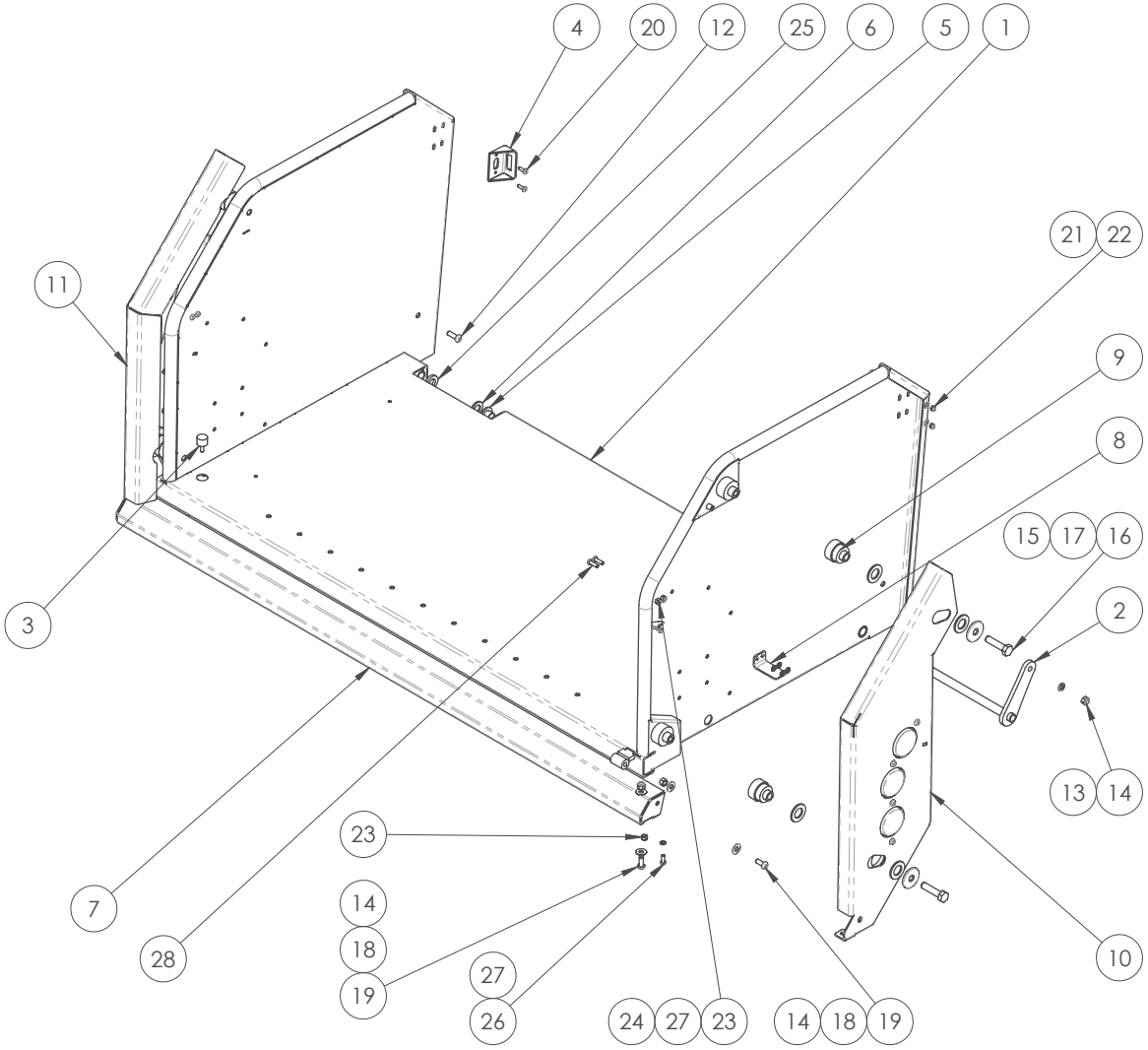

ITEM NO.	PART NUMBER	REFERENCE NUMBER	DESCRIPTION	QTY.
1	4024633	N/A	FLAP FABRICATION	1
2	4033879	N/A	LONG FLAP CONNECTION PIN FABRICATION	2
3	4019108	N/A	RUBBER BUFFER Ø20 X 15 MALE	2
4	4001337	ARB150-4-148	FLAP STOP FABRICATION	2
5	4031342	N/A	FLANGED NYLON BUSH	2
6	91602N30	FASTENERS	M16 30MM NYLON WASHER	4
7	4033922	N/A	205 FLOATING LOWER BAR	1
8	4033224	N/A	STRIKER PLATE	2
9	4033378	N/A	FLOATING BAR MOUNT BOSS EXTENSION	4
10	4051629	N/A	3 BUTTON SAFETY BAR RIGHT SIDE ASSEMBLY	1
11	4051630	N/A	3 BUTTON SAFETY BAR LEFT SIDE ASSEMBLY	1
12	60825	FASTENERS	M8 X 25 BUTTON	2
13	90802A	FASTENERS	M8 A WASHER	2
14	90801	FASTENERS	M8 NYLOC NUT	6
15	9202N37	N/A	NYLON WASHER 21 X 37 X 3	8
16	91250S	FASTENERS	M12 X 50 SET	4
17	91202HD44	FASTENERS	M12 44MM HD WASHER	4
18	90802C	FASTENERS	M8 C WASHER	8
19	60820	FASTENERS	M8 X 20 BUTTON	4
20	60516	FASTENERS	M5 X 16 BUTTON	4
21	90502C	FASTENERS	M5 C WASHER	4
22	90501	FASTENERS	M5 NYLOC NUT	4
23	90601	FASTENERS	M6 NYLOC NUT	8
24	90602A	FASTENERS	M6 A WASHER	6
25	91602N30-5	FASTENERS	NYLON WASHER 17 ID X 30 OD X 5 THICK	2
26	60616	FASTENERS	M6 X 16 BUTTON	2
27	90603	FASTENERS	M6 SPRING WASHER	6
28	60620	FASTENERS	M6 X 20 BUTTON	4

L R

DRAWING NUMBER:	SHEET NO.	REVISION:
4033876	1/1	A

DESCRIPTION:
3 BUTTON WITH SENSOR INFEED FLAP ASSEMBLY

GreenMech Ltd
Tomo Industrial Estate
Stowmarket
Suffolk
IP14 5AY
United Kingdom

Tel: +44(0)1449 765800
E-mail: sales@greenmech.co.uk

GreenMech
The Professionals' Choice

COPYRIGHT GREENMECH LTD.

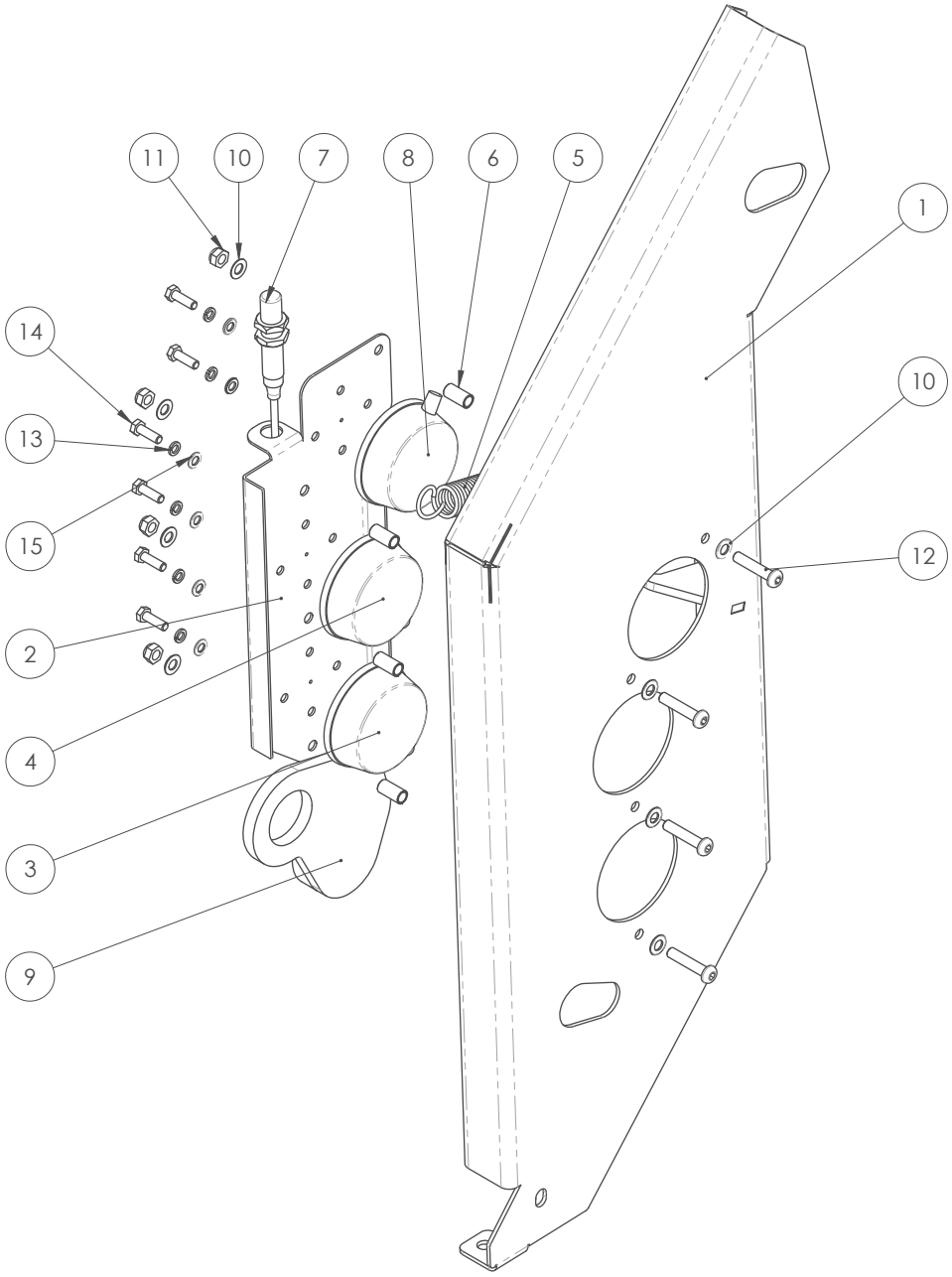

ITEM NO.	PART NUMBER	REFERENCE NUMBER	DESCRIPTION	QTY.
1	4033263	N/A	SAFETY BAR RIGHT SIDE FABRICATION	1
2	4045283	N/A	3 BUTTON HOLDER RIGHT HAND	1
3	4001699	900950328	HAND SWITCH BLUE	1
4	4001698	900950327	HAND SWITCH GREEN	1
5	4036011	N/A	FLOATING BAR SPRING E7707480	1
6	4033529	FASTENER	LONG ROLLED SPACER	4
7	4033710	C200909	E2E-X9B1TL12 PROXIMITY SENSOR	1
8	4005210	900950329	HAND SWITCH YELLOW	1
9	4034872	N/A	RIGHT HAND FLAP LOCK FABRICATION	1
10	90602B	FASTENERS	M6 B WASHER	8
11	90601T	FASTENERS	M6 THIN NYLOC NUT	4
12	60630	FASTENERS	M6 X 30 BUTTON	4
13	90503	FASTENERS	M5 SPRING WASHER	6
14	90516S	FASTENERS	M5 X 16 SET	6
15	90502A	FASTENERS	M5 A WASHER	6

L R

DRAWING NUMBER:	SHEET NO.	REVISION:
4051629	1/1	A

DESCRIPTION:
3 BUTTON SAFETY BAR RIGHT SIDE ASSEMBLY

GreenMech Ltd
Tomo Industrial Estate
Stowmarket
Suffolk
IP14 5AY
United Kingdom

Tel: +44(0)1449 765800
E-mail: sales@greenmech.co.uk

GreenMech
The Professionals' Choice

COPYRIGHT GREENMECH LTD.

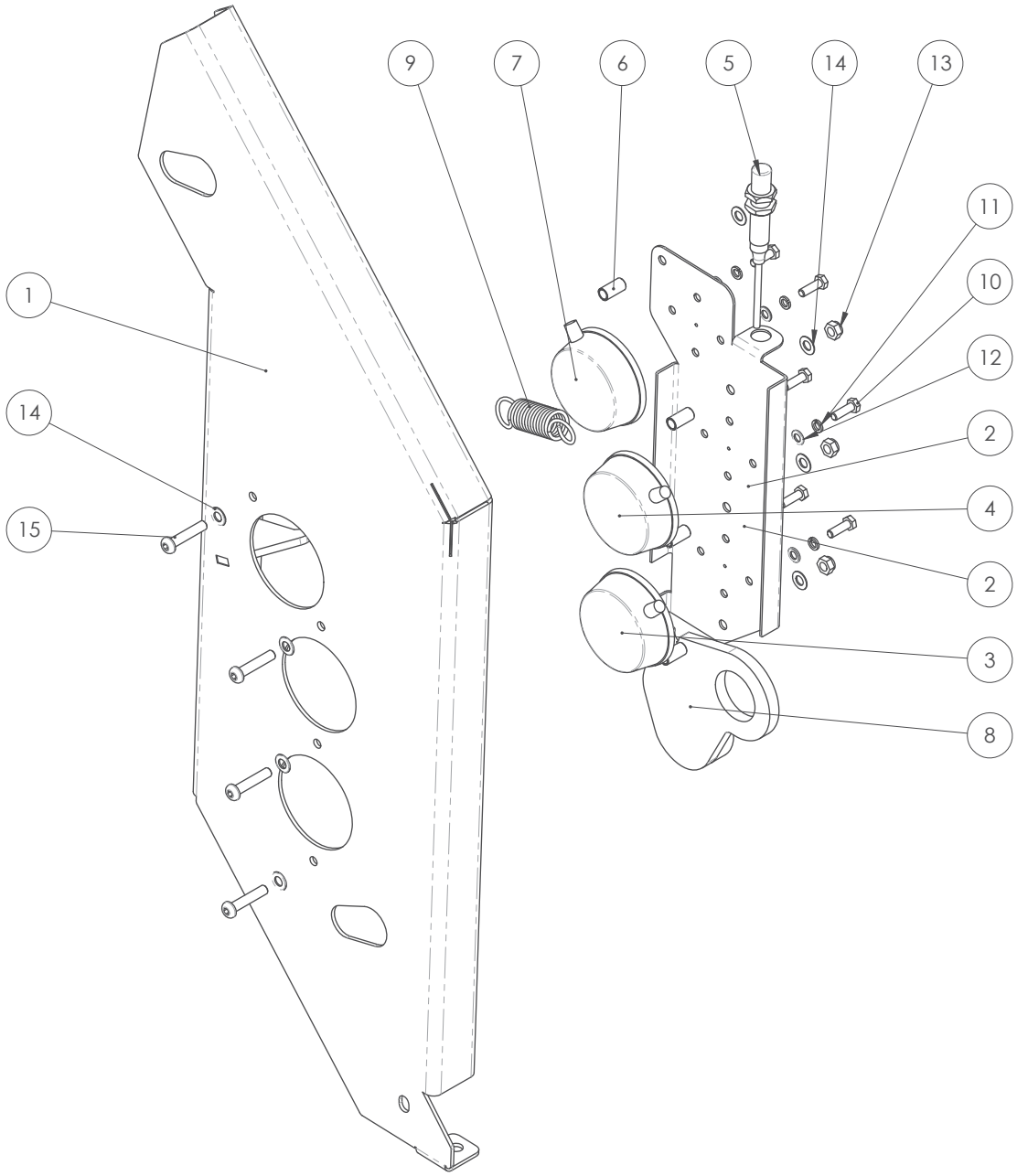

ITEM NO.	PART NUMBER	REFERENCE NUMBER	DESCRIPTION	QTY.
1	4033273	N/A	SAFETY BAR LEFT SIDE FABRICATION	1
2	4045289	N/A	3 BUTTON HOLDER LEFT HAND	1
3	4001699	900950328	HAND SWITCH BLUE	1
4	4001698	900950327	HAND SWITCH GREEN	1
5	4033710	C200909	E2E-X9B1TL12 PROXIMITY SENSOR	1
6	4033529	FASTENER	LONG ROLLED SPACER	4
7	4005210	900950329	HAND SWITCH YELLOW	1
8	4034873	N/A	LEFT HAND FLAP LOCK FABRICATION	1
9	4036011	N/A	FLOATING BAR SPRING E7707480	1
10	90516S	FASTENERS	M5 X 16 SET	6
11	90503	FASTENERS	M5 SPRING WASHER	6
12	90502A	FASTENERS	M5 A WASHER	6
13	90601T	FASTENERS	M6 THIN NYLOC NUT	4
14	90602B	FASTENERS	M6 B WASHER	8
15	60630	FASTENERS	M6 X 30 BUTTON	4

L R

DRAWING NUMBER:	SHEET NO.	REVISION:
4051630	1/1	A

DESCRIPTION:
3 BUTTON SAFETY BAR LEFT SIDE ASSEMBLY

GreenMech Ltd
Tomo Industrial Estate
Stowmarket
Suffolk
IP14 5AY
United Kingdom

Tel: +44(0)1449 765800
E-mail: sales@greenmech.co.uk

GreenMech
The Professionals' Choice

COPYRIGHT GREENMECH LTD.

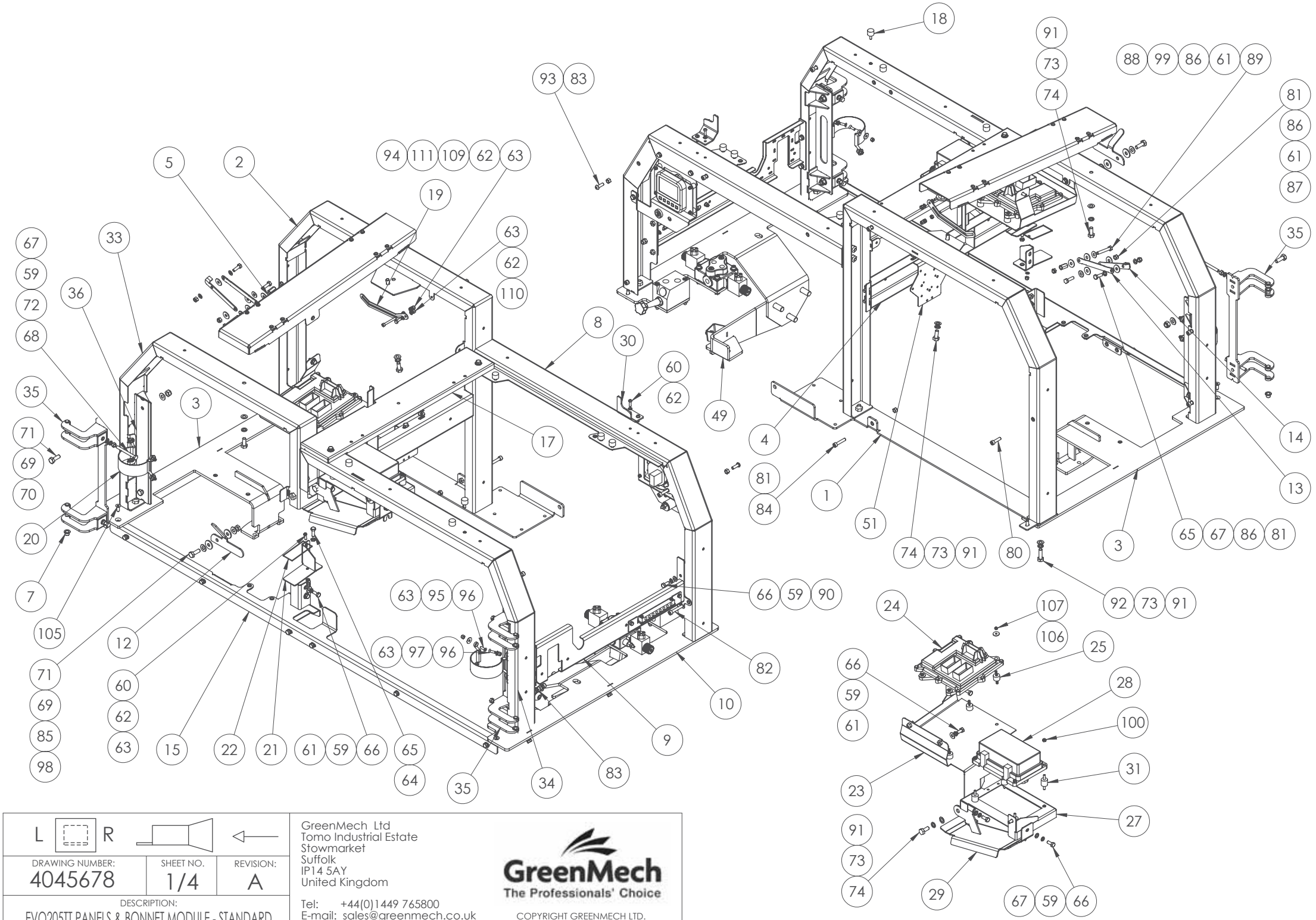

L ▭ R		◁
DRAWING NUMBER: 4045678	SHEET NO. 1/4	REVISION: A
DESCRIPTION: EVO205TT PANELS & BONNET MODULE - STANDARD		

GreenMech Ltd
Tomo Industrial Estate
Stowmarket
Suffolk
IP14 5AY
United Kingdom

Tel: +44(0)1449 765800
E-mail: sales@greenmech.co.uk

GreenMech
The Professionals' Choice

COPYRIGHT GREENMECH LTD.

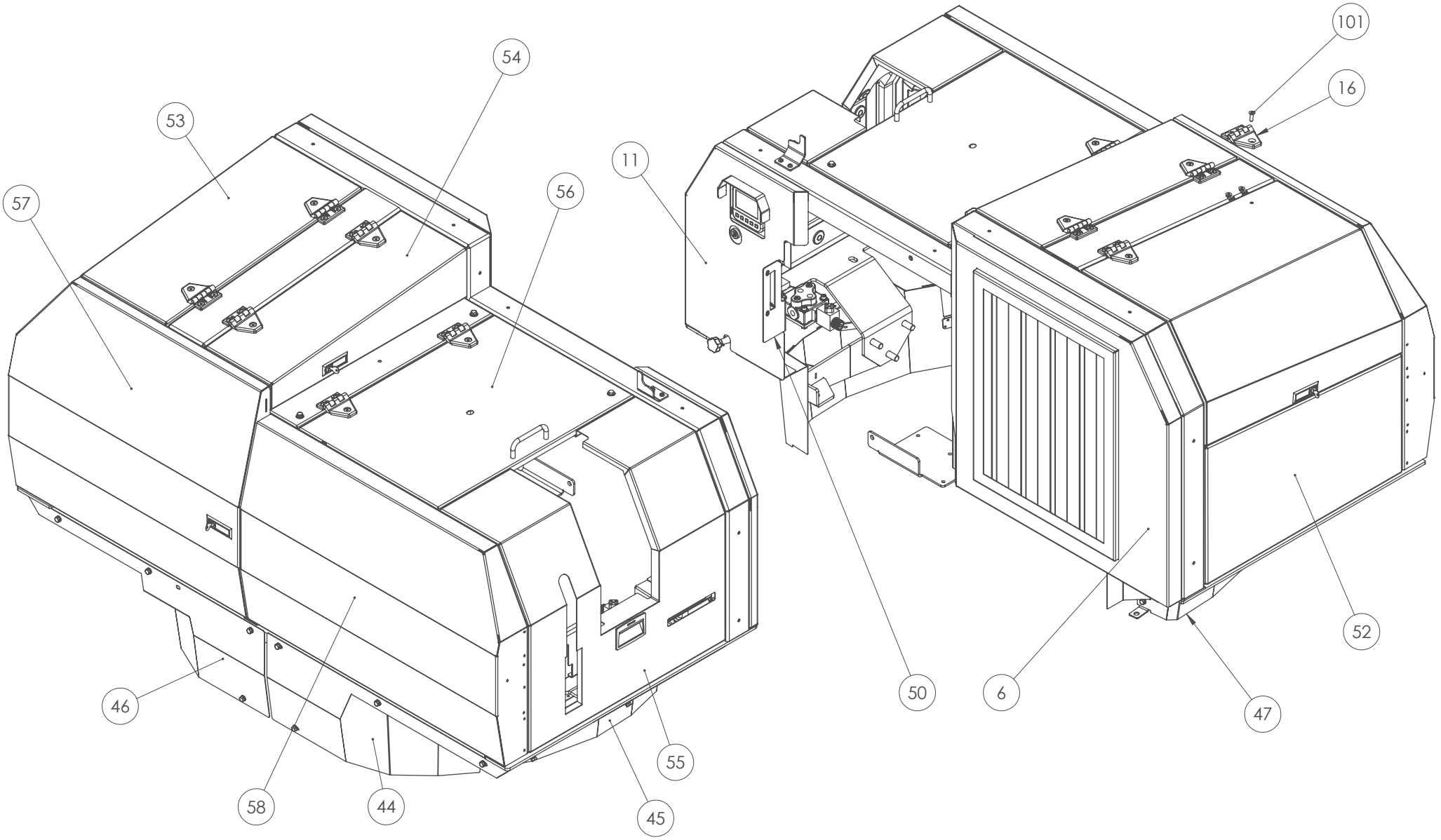

L R		
DRAWING NUMBER: 4045678	SHEET NO. 2/4	REVISION: A
DESCRIPTION: EVO205TT PANELS & BONNET MODULE - STANDARD		

GreenMech Ltd
Tomo Industrial Estate
Stowmarket
Suffolk
IP14 5AY
United Kingdom

Tel: +44(0)1449 765800
E-mail: sales@greenmech.co.uk

GreenMech
The Professionals' Choice

COPYRIGHT GREENMECH LTD.

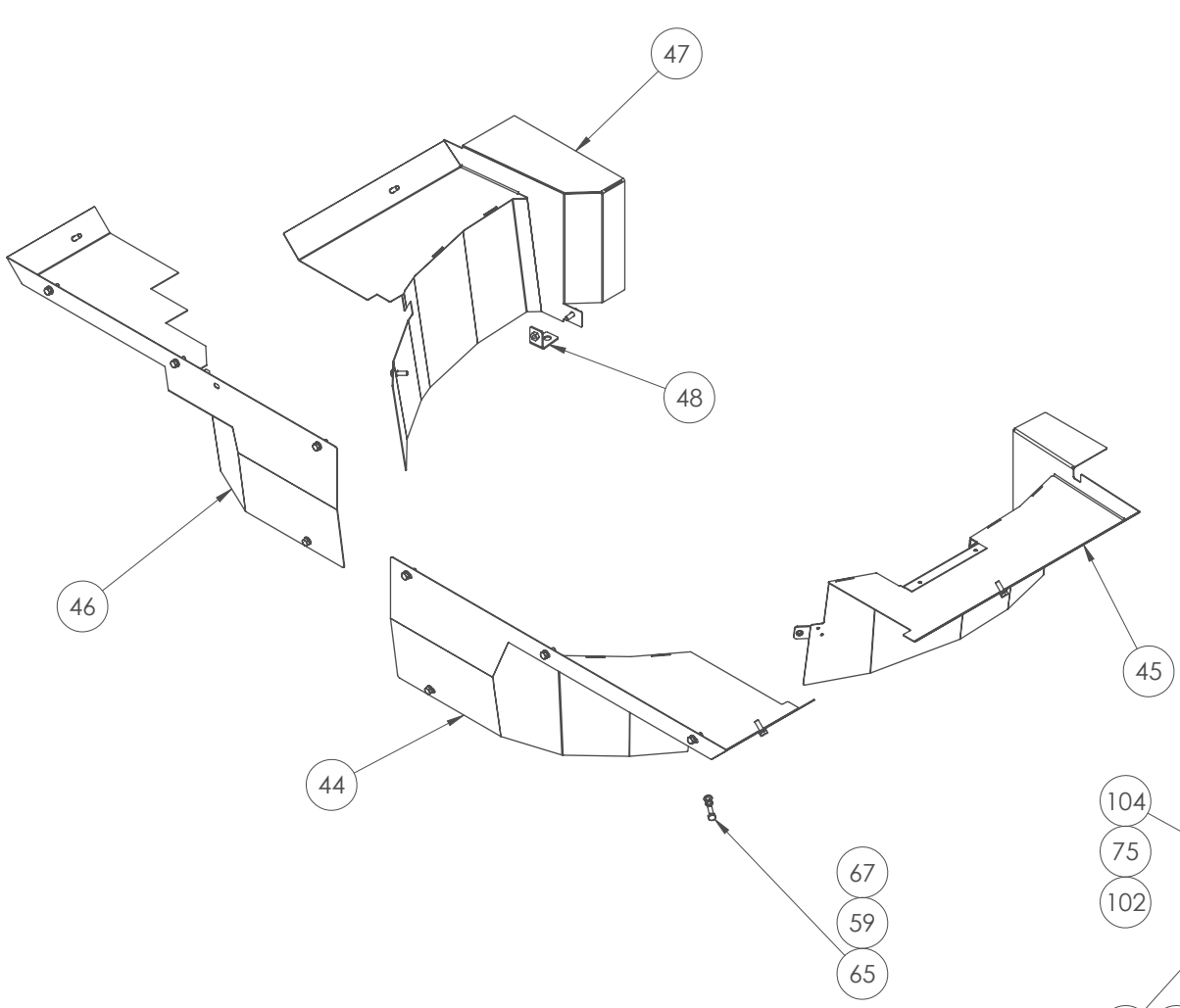

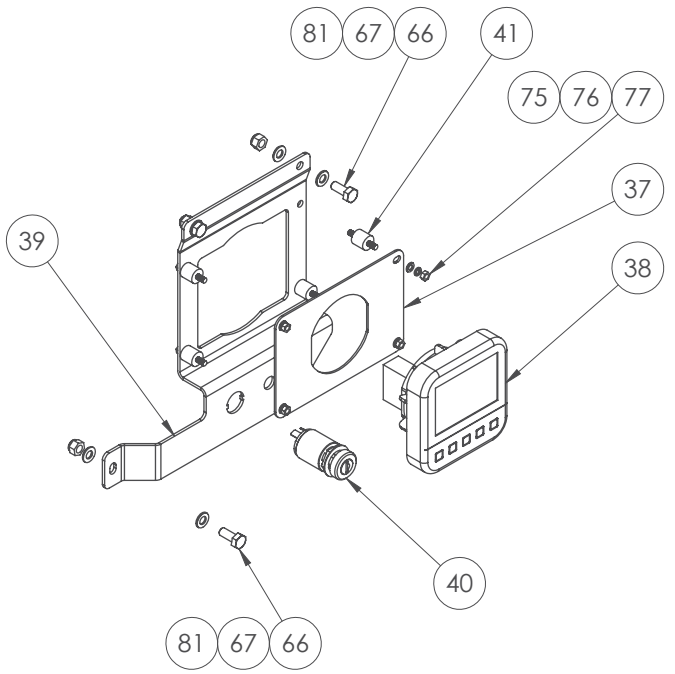

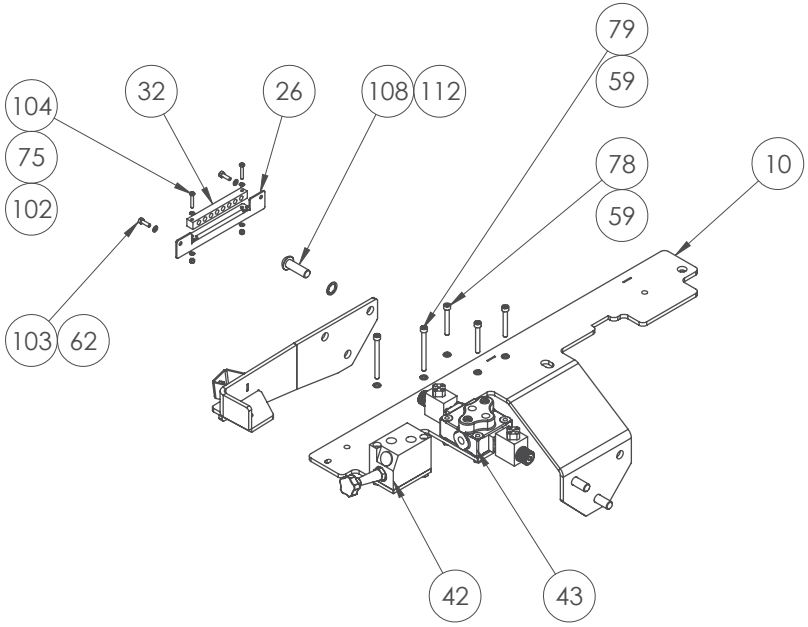

L ☐ R		←
DRAWING NUMBER: 4045678	SHEET NO. 3/4	REVISION: A
DESCRIPTION: EVO205TT PANELS & BONNET MODULE - STANDARD		

GreenMech Ltd
Tomo Industrial Estate
Stowmarket
Suffolk
IP14 5AY
United Kingdom

Tel: +44(0)1449 765800
E-mail: sales@greenmech.co.uk

GreenMech
The Professionals' Choice

COPYRIGHT GREENMECH LTD.

ITEM NO.	PART NUMBER	REFERENCE NUMBER	DESCRIPTION	QTY.
1	4042349	N/A	RADIATOR FRAME LOWER SUPPORT FABRICATION	1
2	4042161	N/A	RADIATOR SUPPORT FRAME FABRICATION	1
3	4042968	N/A	ENGINE SIDE PANEL SUPPORT FABRICATION	1
4	4045684	N/A	CENTRAL SUPPORT RAIL FABRICATION	1
5	4042209	N/A	TOP PANEL CENTRAL BEAM FABRICATION	1
6	4042150	N/A	GRILLE FABRICATION	1
7	4036029	N/A	NYLON FLANGED BUSH	8
8	4036184	N/A	CHAMBER FRONT PANEL SUPPORT FABRICATION	1
9	4036163	N/A	CHAMBER SIDE PANEL MID FRAME	1
10	4036699	N/A	CHAMBER SIDE PANEL SUPPORT FABRICATION	1
11	4036241	N/A	CHAMBER FRONT PANEL FABRICATION	1
12	4042529	N/A	REAR DOOR LOCKING LATCH	1
13	4036846	N/A	BONNET STAY LOWER PART	1
14	4036854	N/A	BONNET STAY UPPER PART	1
15	4045670	N/A	REAR LOWER PANELS MOUNT FABRICATION	1
16	4022863	QC160-1-1012	HINGE A-JAGGER 1350-002	6
17	4037374	N/A	CHAMBER TOP PANEL INFILL	1
18	4019108	N/A	RUBBER BUFFER Ø20 X 15 MALE	9
19	4038289	N/A	BONNET STAY	1
20	4051678	N/A	CHECK STRAP	2
21	4045681	N/A	REAR DOOR SUPPORT FABRICATION	1
22	4048066	N/A	REAR DOOR LOCATOR PAD	1
23	4045722	N/A	ENGINE ECU MOUNT FABRICATION	1
24	4021897	N/A	KUBOTA ECU	1
25	4022681	N/A	M5 BOBBIN 18mm THREAD 20mm DIA	4
26	4037606	N/A	GREASING MANIFOLD BRACKET	1
27	4038518	N/A	LARGE RELAY BOX BRACKET FABRICATION	1
28	4027510	N/A	BIG RELAY BOX	1
29	4046529	N/A	BELT DEFLECTOR FABRICATION	1
30	4046728	N/A	INDEX HANDLE ROTATE POSITION STOP	1
31	4031423	N/A	M-M BOBBIN 20X20 M6 X 18	4
32	4037954	N/A	8 PORT 1/8 GREASING MANIFOLD	1
33	4048818	N/A	REAR DOOR OUTER SUPPORT FABRICATION	1
34	4048833	N/A	REAR DOOR OUTER SUPPORT FABRICATION	1
35	4048859	N/A	REAR DOOR HINGE FABRICATION	2
36	4048873	N/A	REAR DOOR HINGE PACKER 1.5	2
37	4025679	N/A	DEEPSEA MOUNT PLATE	1
38	4025520	M835-01	DEEPSEA CONTROLLER DSEE050	1
39	4037524	N/A	CONTROLER SUPPORT	1
40	4030442	N/A	DURITE IGNITION BARREL 0-351-05	1
41	4020548	N/A	M5 BOBBIN	4
42	4007101	900990316	FLOW CONTROL(FC60 K L)	1
43	4001684	QC160-6-9017	HYDRAULIC VALVE	1
44	4042940	N/A	REAR PANEL FABRICATION	1
45	4043261	N/A	LOWER REAR PANEL FABRICATION	1
46	4046105	N/A	EXHAUST REAR PANEL FABRICATION	1
47	4046120	N/A	ENGINE LOWER PANEL FABRICATION	1
48	4043294	N/A	LOWER PANEL SUPPORT BRACKET FABRICATION	1
49	4035803	N/A	LOWER SPRING ANCHOR FABRICATION	1
50	4036246	N/A	CHAMBER FRONT PANEL ANCHOR PLATE	1
51	4051699	N/A	ENGINE CABLE BRACKET FABRICATION	1
52	4036899	N/A	ENGINE LOWER SIDE PANEL	1
53	4036914	QC205	TOP PANEL OUTER ASSEMBLY	1
54	4036908	N/A	TOP PANEL INNER	1
55	4036923	QC205	CHAMBER SIDE PANEL	1

ITEM NO.	PART NUMBER	REFERENCE NUMBER	DESCRIPTION	QTY.
56	4036938	N/A	CHAMBER TOP COVER	1
57	4042446	N/A	REAR PANEL DOOR RIGHT ASSEMBLY	1
58	4042475	N/A	REAR PANEL DOOR LEFT ASSEMBLY	1
59	90803	FASTENERS	M8 SPRING WASHER	44
60	60620	FASTENERS	M6 X 20 BUTTON	3
61	90802C	FASTENERS	M8 C WASHER	11
62	90602A	FASTENERS	M6 A WASHER	12
63	90601	FASTENERS	M6 NYLOC NUT	13
64	90801PT	FASTENERS	M8 PLAIN THIN NUT	1
65	90825S	FASTENERS	M8 X 25 SET	21
66	90820S	FASTENERS	M8 X 20 SET	20
67	90802A	FASTENERS	M8 A WASHER	40
68	90880	FASTENERS	M8 X 80	4
69	91002C	FASTENERS	M10 C WASHER	6
70	91001	FASTENERS	M10 NYLOC NUT	4
71	91030S	FASTENERS	M10 X 30 SET	9
72	90801L	FASTENERS	M8 LOCKING NUT	4
73	91003	FASTENERS	M10 SPRING WASHER	15
74	91025S	FASTENERS	M10 X 25 SET	10
75	90502A	FASTENERS	M5 A WASHER	12
76	90503	FASTENERS	M5 SPRING WASHER	8
77	90501PT	FASTENERS	M5 THIN PLAIN NUT	8
78	70860	FASTENERS	M8 X 60 CAP	3
79	70890	FASTENERS	M8 X 90 CAP	2
80	70830	FASTENERS	M8 X 30 CAP	9
81	90801	FASTENERS	M8 NYLOC NUT	13
82	70850	FASTENERS	M8 X 50 CAP	2
83	90801P	FASTENERS	M8 PLAIN NUT	6
84	70840	FASTENERS	M8 X 40 CAP	2
85	91002N30	FASTENERS	M10 30MM NYLON WASHER	2
86	90802N25	FASTENERS	M8 25MM NYLON WASHER	5
87	90830S	FASTENERS	M8 X 30 SET	1
88	90801T	FASTENERS	M8 THIN NYLOC NUT	7
89	90855	FASTENERS	M8 X 55	1
90	90802B	FASTENERS	M8 B WASHER	9
91	91002B	FASTENERS	M10 B WASHER	16
92	91035S	FASTENERS	M10 X 35 SET	1
93	60825	FASTENERS	M8 X 25 BUTTON	1
94	70650	FASTENERS	M6 X 50 CAP	1
95	90602R20	FASTENERS	M6 20mm OD WASHER	4
96	80620	FASTENERS	M6 X 20 CSK	8
97	90602C	FASTENERS	M6 C WASHER	4
98	91001PT	FASTENERS	M10 THIN PLAIN NUT	1
99	90801C	FASTENERS	M8 CONNECTOR NUT	1
100	90601T	FASTENERS	M6 THIN NYLOC NUT	6
101	80825	FASTENERS	M8 X 25 CSK	18
102	90501	FASTENERS	M5 NYLOC NUT	6
103	90620S	FASTENERS	M6 X 20 SET	2
104	60530	FASTENERS	M5 X 30 BUTTON	2
105	80820	FASTENERS	M8 X 20 CSK	2
106	90502R20	FASTENERS	M5 20MM REPAIR WASHER	8
107	90501T	FASTENERS	M5 THIN NYLOC NUT	4
108	61650	FASTENERS	M16 X 50 ZINC PLATED BUTTON	3
109	90603	FASTENERS	M6 SPRING WASHER	1
110	90618S	FASTENERS	M6 X 18 SET	1
111	90601P	FASTENERS	M6 PLAIN NUT	1
112	91604	FASTENERS	M16 INTERNAL SHAKE PROOF WASHER	3

L  R 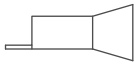 

DRAWING NUMBER:	SHEET NO.	REVISION:
4045678	4/4	A

DESCRIPTION:
EVO205TT PANELS & BONNET MODULE - STANDARD

GreenMech Ltd
Tomo Industrial Estate
Stowmarket
Suffolk
IP14 5AY
United Kingdom

Tel: +44(0)1449 765800
E-mail: sales@greenmech.co.uk

GreenMech
The Professionals' Choice

COPYRIGHT GREENMECH LTD.

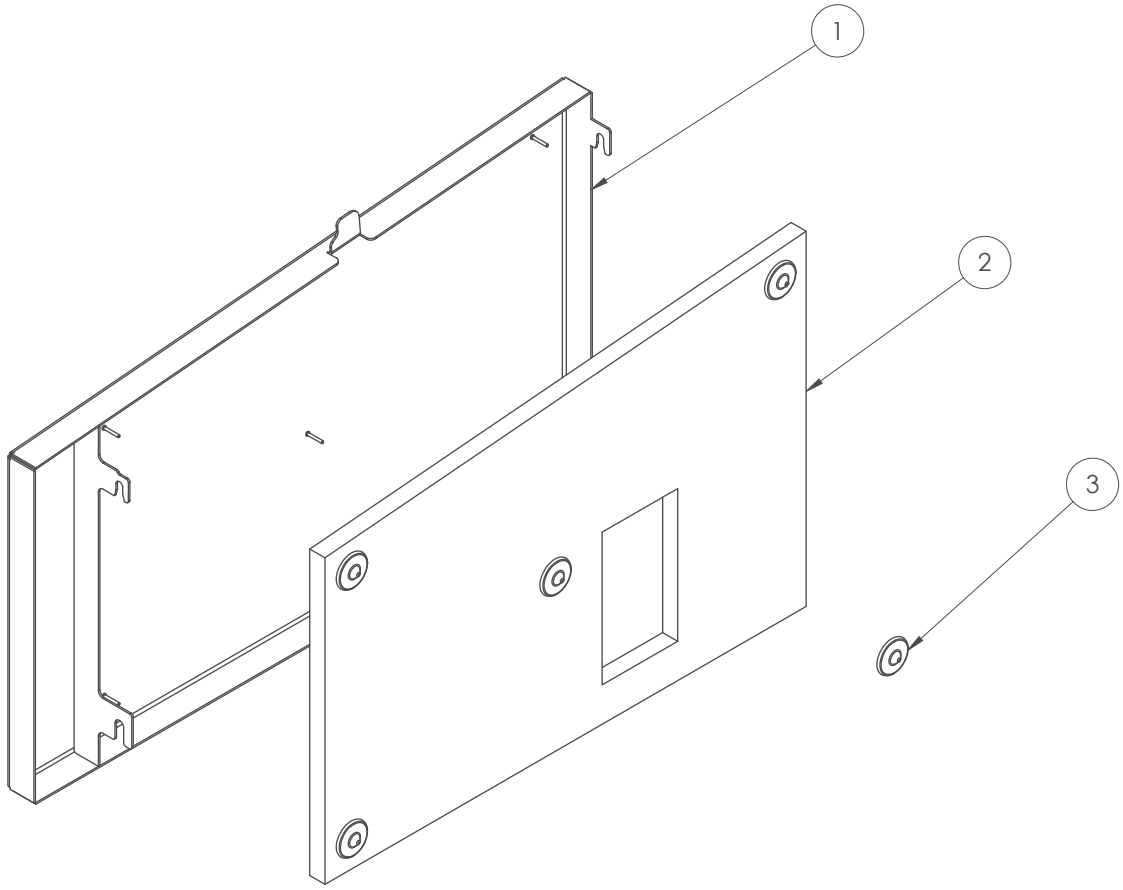

ITEM NO.	PART NUMBER	REFERENCE NUMBER	DESCRIPTION	QTY.
1	4035861	N/A	ENGINE LOWER SIDE PANEL FABRICATION	1
2	4036900	QC205	ENGINE SIDE LOWER PANEL FOAM	1
3	4020422	N/A	FOAM RETAINER CUP	5

L R

DRAWING NUMBER:	SHEET NO.	REVISION:
4036899	1/1	A

DESCRIPTION:
ENGINE LOWER SIDE PANEL

GreenMech Ltd
Tomo Industrial Estate
Stowmarket
Suffolk
IP14 5AY
United Kingdom

Tel: +44(0)1449 765800
E-mail: sales@greenmech.co.uk

GreenMech
The Professionals' Choice

COPYRIGHT GREENMECH LTD.

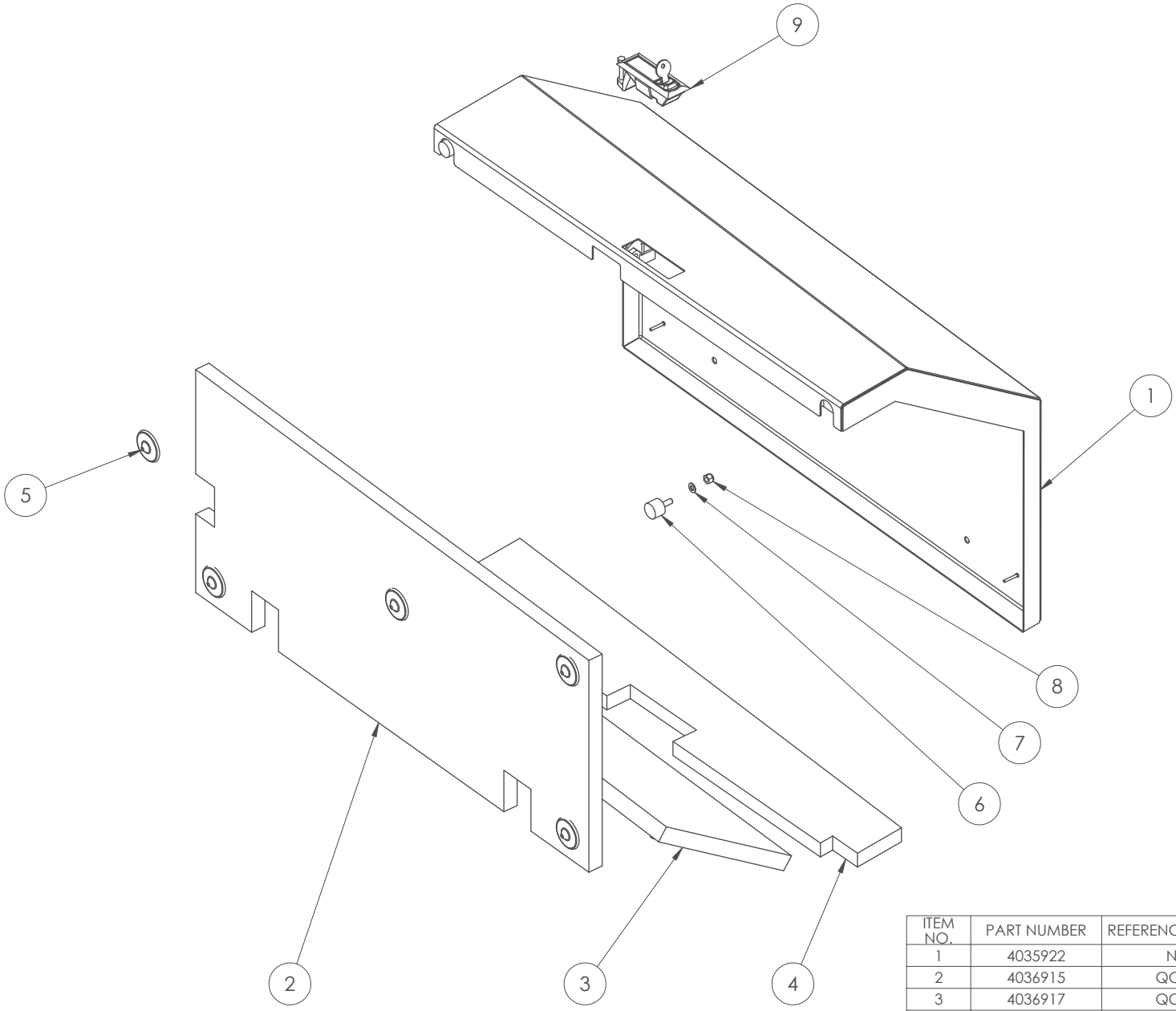

ITEM NO.	PART NUMBER	REFERENCE NUMBER	DESCRIPTION	QTY.
1	4035922	N/A	TOP PANEL OUTER FABRICATION	1
2	4036915	QC205	TOP PANEL OUTER FOAM	1
3	4036917	QC205	TOP PANEL OUTER FOAM	1
4	4036919	QC205	TOP PANEL OUTER FOAM	1
5	4020422	N/A	FOAM RETAINER CUP	13
6	4019108	N/A	RUBBER BUFFER Ø20 X 15 MALE	2
7	90602A	FASTENERS	M6 A WASHER	2
8	90601	FASTENERS	M6 NYLOC NUT	2
9	4012617	N/A	LATCH	1

L R

DRAWING NUMBER:	SHEET NO.	REVISION:
4036914	1/1	A

DESCRIPTION:
TOP PANEL OUTER ASSEMBLY

GreenMech Ltd
Tomo Industrial Estate
Stowmarket
Suffolk
IP14 5AY
United Kingdom

Tel: +44(0)1449 765800
E-mail: sales@greenmech.co.uk

GreenMech
The Professionals' Choice

COPYRIGHT GREENMECH LTD.

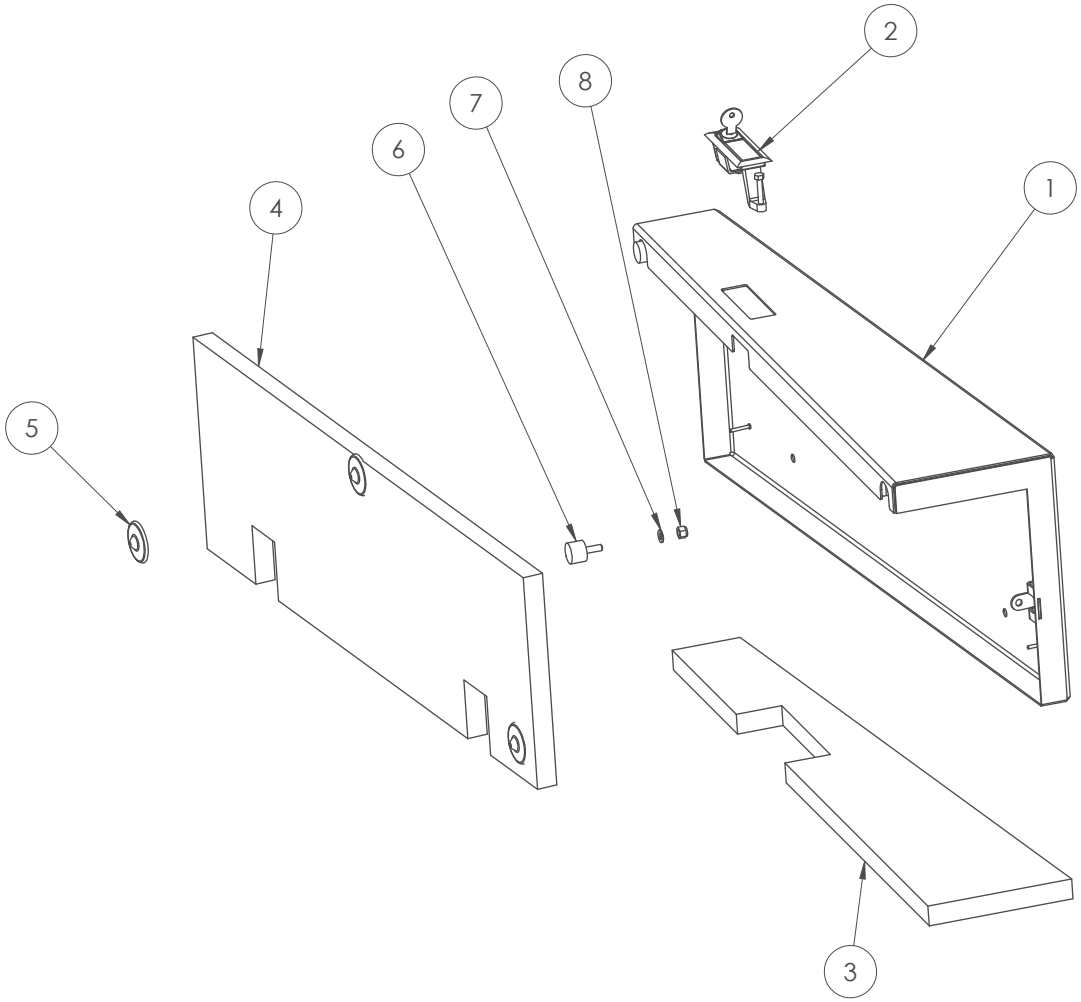

ITEM NO.	PART NUMBER	REFERENCE NUMBER	DESCRIPTION	QTY.
1	4036081	N/A	TOP PANEL INNER FABRICATION	1
2	4012617	N/A	LATCH	1
3	4036904	QC205	TOP PANEL INNER FOAM	1
4	4036912	QC205	TOP PANEL INNER FOAM	1
5	4020422	N/A	FOAM RETAINER CUP	5
6	4019108	N/A	RUBBER BUFFER Ø20 X 15 MALE	2
7	90602A	FASTENERS	M6 A WASHER	2
8	90601	FASTENERS	M6 NYLOC NUT	2

L R

DRAWING NUMBER:	SHEET NO.	REVISION:
4036908	1/1	A

DESCRIPTION:
TOP PANEL INNER

GreenMech Ltd
Tomo Industrial Estate
Stowmarket
Suffolk
IP14 5AY
United Kingdom

Tel: +44(0)1449 765800
E-mail: sales@greenmech.co.uk

GreenMech
The Professionals' Choice

COPYRIGHT GREENMECH LTD.

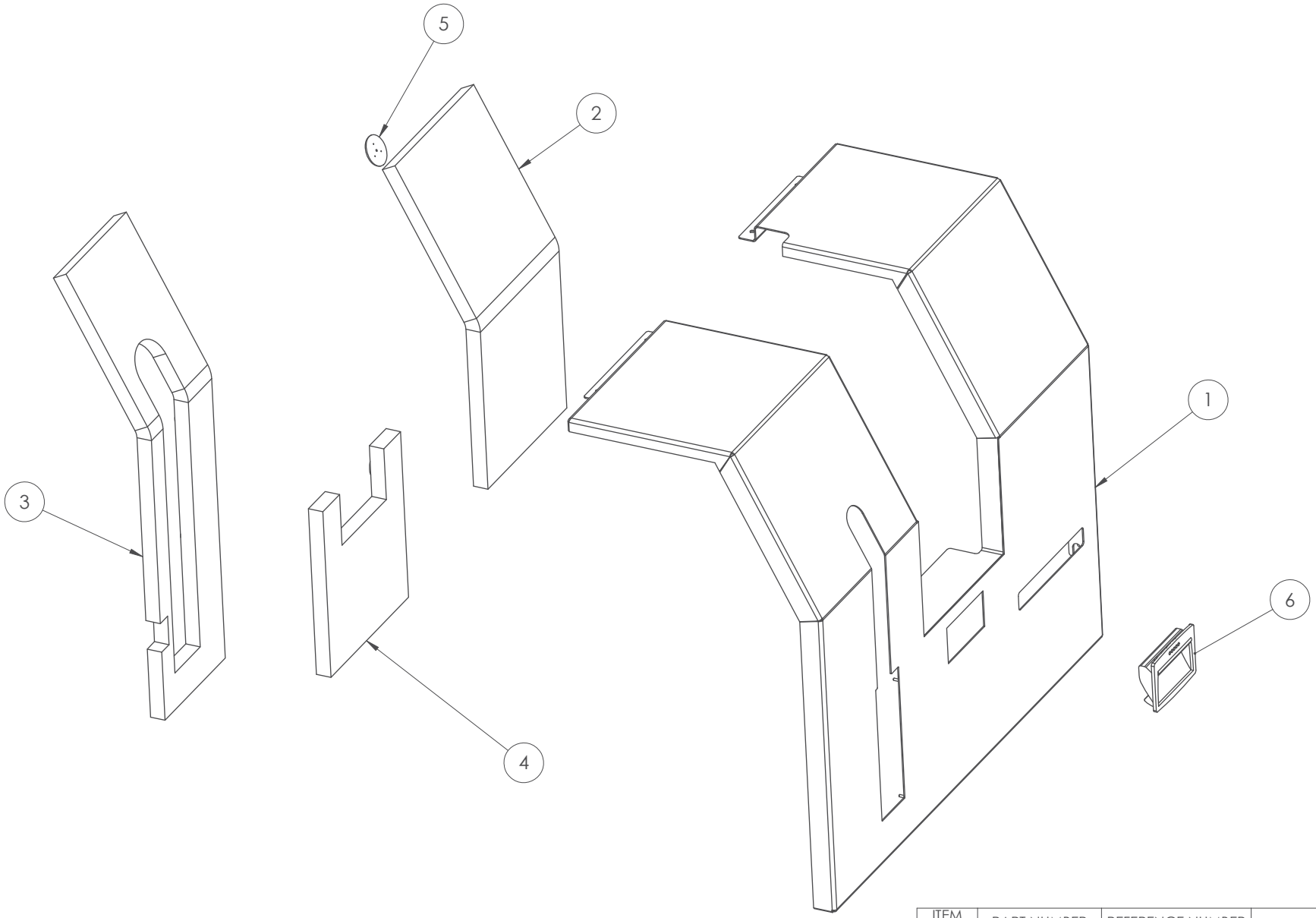

ITEM NO.	PART NUMBER	REFERENCE NUMBER	DESCRIPTION	QTY.
1	4036194	N/A	CHAMBER SIDE PANEL	1
2	4036925	QC205	CHAMBER SIDE PANEL FOAM	1
3	4036930	QC205	CHAMBER SIDE PANEL FOAM	1
4	4036933	QC205	CHAMBER SIDE PANEL FOAM	1
5	4020422	N/A	FOAM RETAINER CUP	13
6	4043217	N/A	FLUSH PULL HANDLE EPR.110-PF-C1	1

L R

DRAWING NUMBER:	SHEET NO.	REVISION:
4036923	1/1	A

DESCRIPTION:
CHAMBER SIDE PANEL

GreenMech Ltd
Tomo Industrial Estate
Stowmarket
Suffolk
IP14 5AY
United Kingdom

Tel: +44(0)1449 765800
E-mail: sales@greenmech.co.uk

GreenMech
The Professionals' Choice

COPYRIGHT GREENMECH LTD.

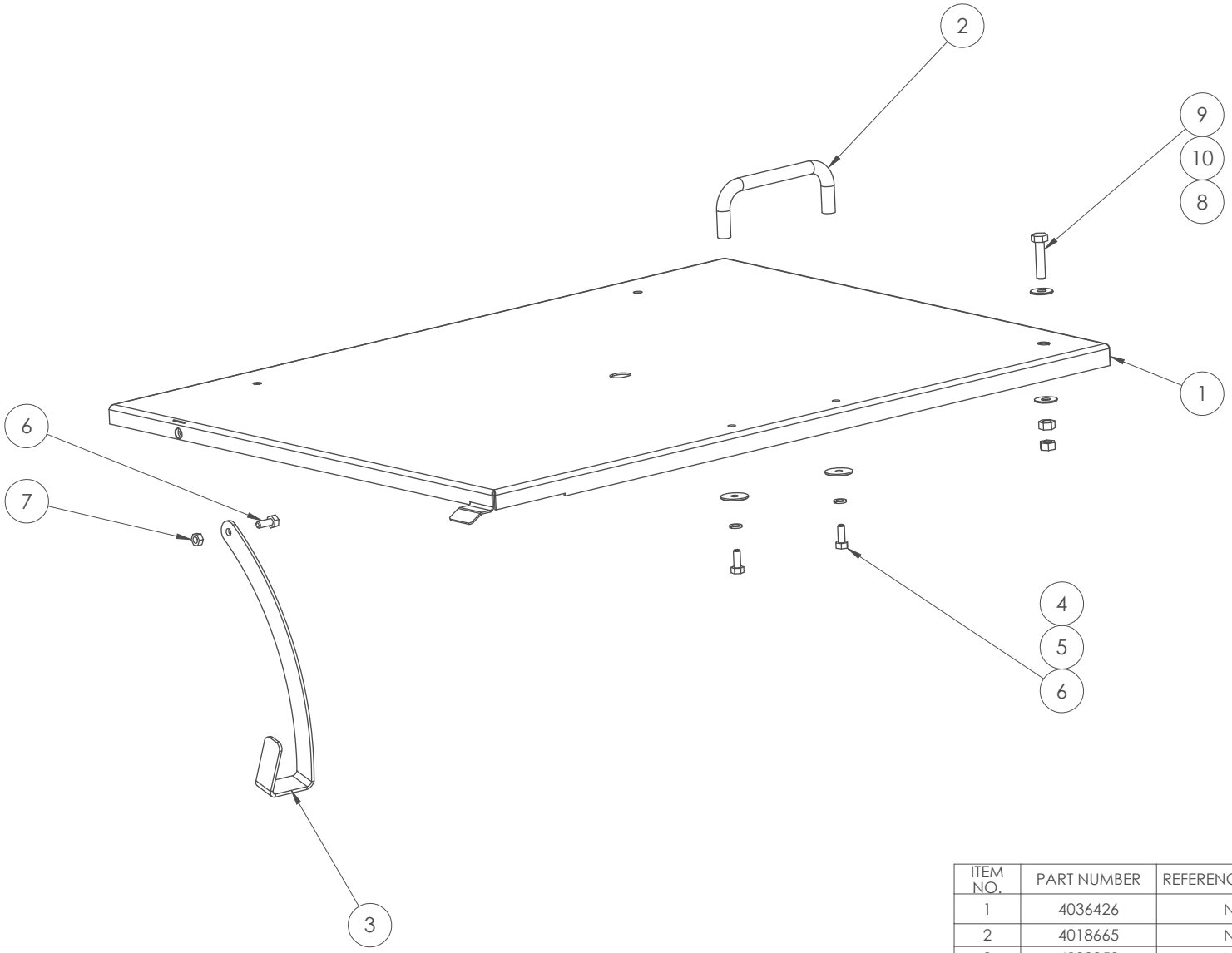

ITEM NO.	PART NUMBER	REFERENCE NUMBER	DESCRIPTION	QTY.
1	4036426	N/A	CHAMBER TOP COVER FABRICATION	1
2	4018665	N/A	BLACK STEEL HANDLE	1
3	4038359	N/A	CHAMBER TOP COVER STAY	1
4	90602R25	FASTENERS	M6 25mm OD WASHER	2
5	90603	FASTENERS	M6 SPRING WASHER	2
6	90616S	FASTENERS	M6 X 16 SET	3
7	90601PT	FASTENERS	M6 THIN PLAIN NUT	1
8	90801L	FASTENERS	M8 LOCKING NUT	2
9	90835S	FASTENERS	M8 X 35 SET	1
10	90802C	FASTENERS	M8 C WASHER	2

L R

DRAWING NUMBER:	SHEET NO.	REVISION:
4036938	1/1	A

DESCRIPTION:
CHAMBER TOP COVER

GreenMech Ltd
Tomo Industrial Estate
Stowmarket
Suffolk
IP14 5AY
United Kingdom

Tel: +44(0)1449 765800
E-mail: sales@greenmech.co.uk

GreenMech
The Professionals' Choice

COPYRIGHT GREENMECH LTD.

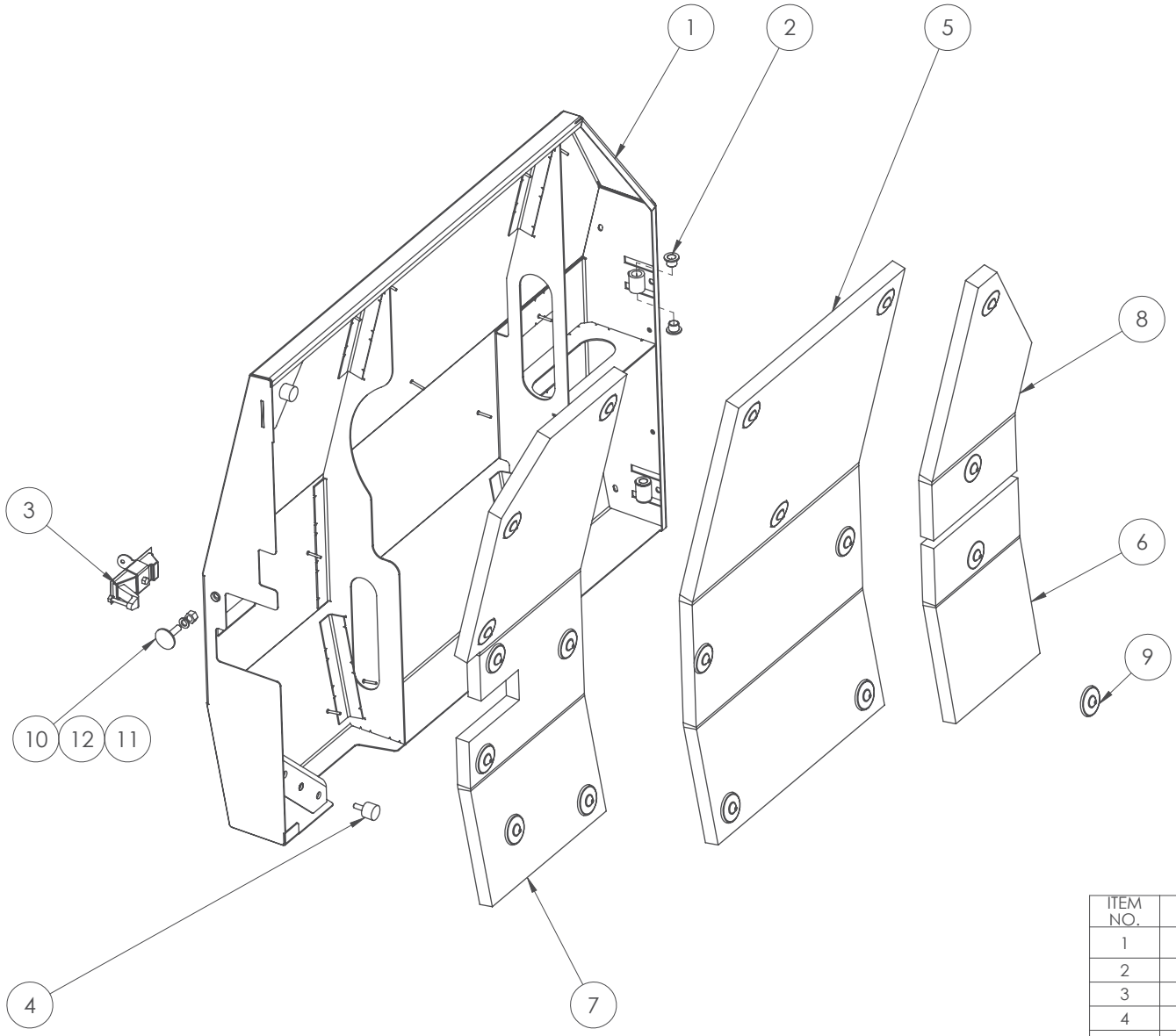

ITEM NO.	PART NUMBER	REFERENCE NUMBER	DESCRIPTION	QTY.
1	4042447	N/A	REAR PANEL DOOR RIGHT FABRICATION	1
2	4036029	N/A	NYLON FLANGED BUSH	4
3	4012617	N/A	LATCH	1
4	4019108	N/A	RUBBER BUFFER Ø20 X 15 MALE	2
5	4036824	QC205	REAR ENGINE DOOR CENTRE FOAM	1
6	4036834	QC205	REAR DOOR FOAM	1
7	4036847	QC205	REAR ENGINE DOOR FOAM	1
8	4036874	QC205	REAR ENGINE DOOR FOAM	1
9	4020422	N/A	FOAM RETAINER CUP	19
10	4001999	CS100-1-36F	MICRO SWITCH STRIKER	1
11	90801P	FASTENERS	M8 PLAIN NUT	1
12	90803	FASTENERS	M8 SPRING WASHER	1

L R

DRAWING NUMBER:	SHEET NO.	REVISION:
4042446	1/1	A

DESCRIPTION:
REAR PANEL DOOR RIGHT ASSEMBLY

GreenMech Ltd
Tomo Industrial Estate
Stowmarket
Suffolk
IP14 5AY
United Kingdom

Tel: +44(0)1449 765800
E-mail: sales@greenmech.co.uk

GreenMech
The Professionals' Choice

COPYRIGHT GREENMECH LTD.

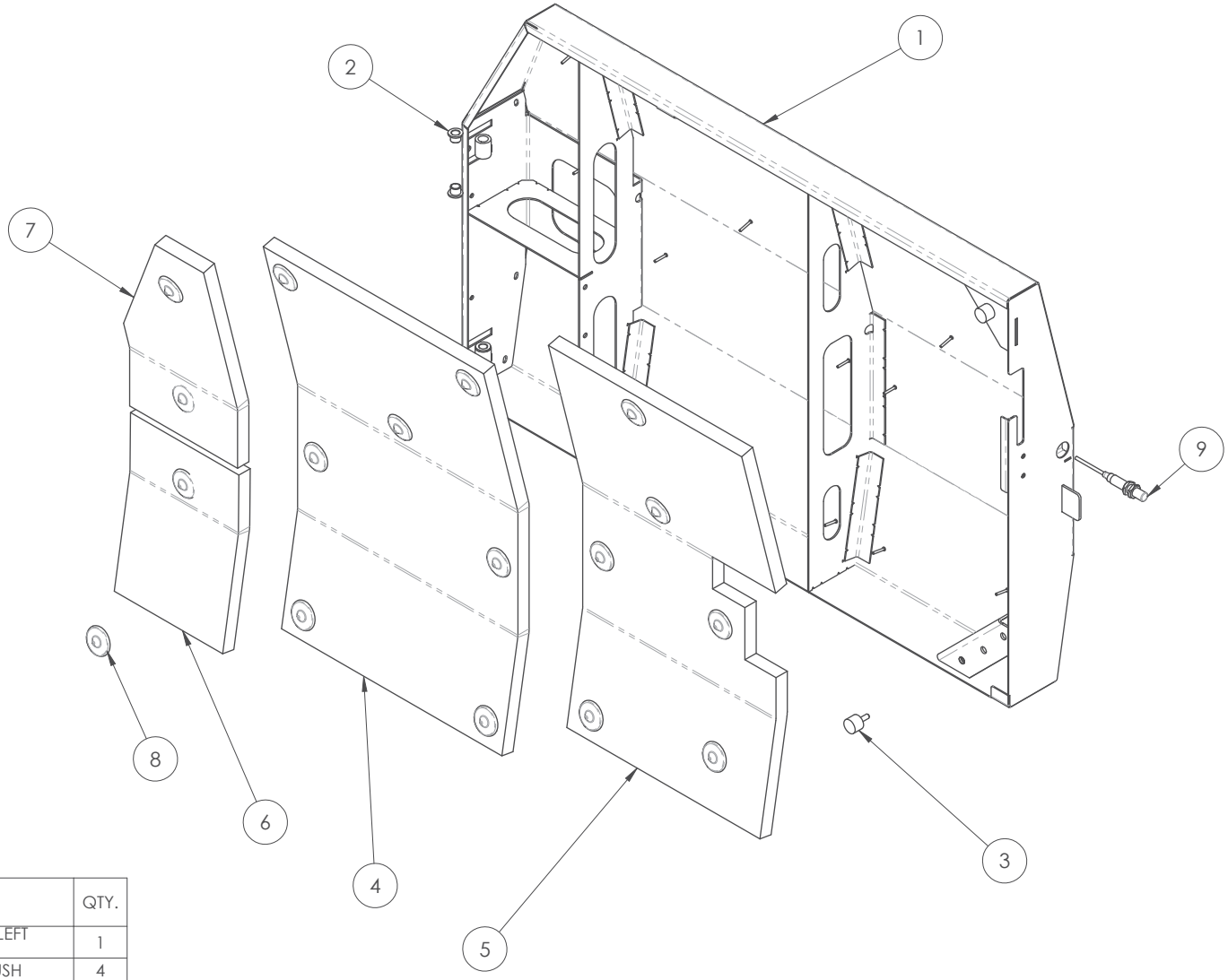

ITEM NO.	PART NUMBER	REFERENCE NUMBER	DESCRIPTION	QTY.
1	4042479	N/A	REAR PANEL DOOR LEFT FABRICATION	1
2	4036029	N/A	NYLON FLANGED BUSH	4
3	4019108	N/A	RUBBER BUFFER Ø20 X 15 MALE	2
4	4036821	QC205	REAR DOOR CENTRE FOAM	1
5	4036831	QC205	REAR DOOR FOAM	1
6	4036834	QC205	REAR DOOR FOAM	1
7	4036863	QC205	REAR DOOR FOAM	1
8	4020422	N/A	FOAM RETAINER CUP	17
9	4033710	C200909	E2E-X9B1TL12 PROXIMITY SENSOR	1

L R

DRAWING NUMBER:	SHEET NO.	REVISION:
4042475	1/1	A

DESCRIPTION:
REAR PANEL DOOR LEFT ASSEMBLY

GreenMech Ltd
Tomo Industrial Estate
Stowmarket
Suffolk
IP14 5AY
United Kingdom

Tel: +44(0)1449 765800
E-mail: sales@greenmech.co.uk

GreenMech
The Professionals' Choice

COPYRIGHT GREENMECH LTD.

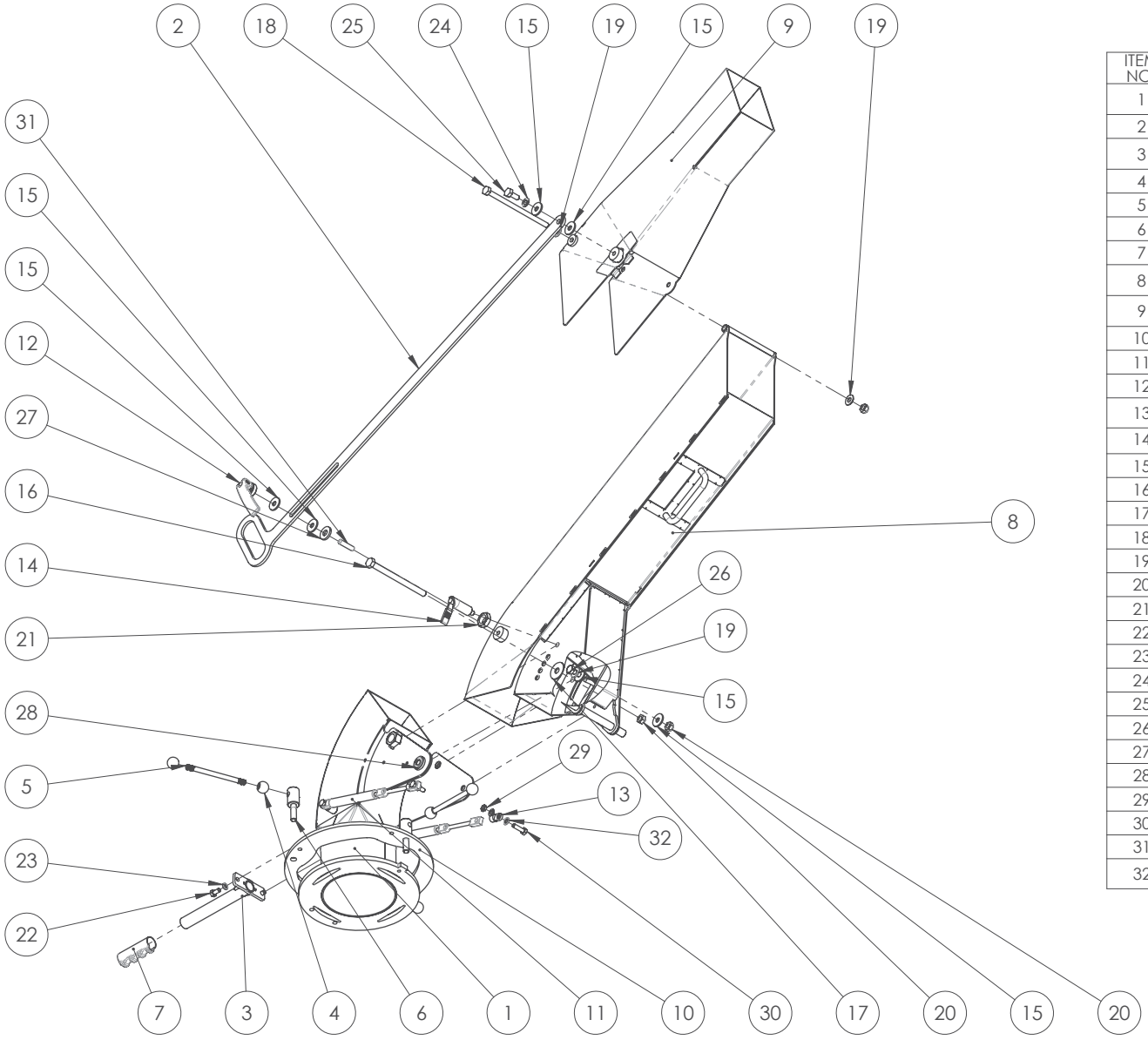

ITEM NO.	PART NUMBER	REFERENCE NUMBER	DESCRIPTION	QTY.
1	4030735	N/A	LARGE SQUARE DISCHARGE CHUTE FABRICATION	1
2	4031995	N/A	DISCHARGE FLAP ADJUSTER BAR	1
3	4022011	N/A	SMALL SQUARE DISCHARGE HANDLE FABRICATION	1
4	4020588	N/A	SPHERICAL KNOB PLX.25 B-M10	6
5	4020585	N/A	DISCHARGE LOCKING SHAFT	3
6	4001581	C200613	CLAMP BOLT	3
7	4001621	9227	PLASTIC HANDLE GRIP	1
8	4032006	N/A	LARGE CHUTE TOP FOLD FABRICATION	1
9	4035078	N/A	LARGE DISCHARGE FLAP FABRICATION	1
10	4027492	N/A	CLAMP RING	1
11	4027604	1245/7581	DISCHARGE GAS STRUT	2
12	4020264	GN.69501	M10 FEMALE CAM HANDLE	1
13	4051469	C252124/1	GAS STRUT EYE	4
14	4022837	GN.34347	GN.34347 Index Plunger	1
15	91002N30	FASTENERS	M10 30MM NYLON WASHER	6
16	912160	FASTENERS	M12 X 160	1
17	91202N40	FASTENERS	M12 40MM NYLON WASHER	2
18	910180	FASTENERS	M10 X 180	1
19	91002C	FASTENERS	M10 C WASHER	3
20	91001T	FASTENERS	M10 THIN NYLOC NUT	3
21	92001PT1.5	FASTENERS	M20 FINE PLAIN THIN NUT	1
22	90816S	FASTENERS	M8 X 16 SET	2
23	90803	FASTENERS	M8 SPRING WASHER	2
24	91002B	FASTENERS	M10 B WASHER	1
25	91025S	FASTENERS	M10 X 25 SET	1
26	91040S	FASTENERS	M10 X 40 SET	1
27	91206HD	FASTENERS	12MM HD WASHER	1
28	91202B	FASTENERS	M12 B WASHER	2
29	90801PT	FASTENERS	M8 PLAIN THIN NUT	4
30	90830S	FASTENERS	M8 X 30 SET	4
31	51040	FASTENERS	M10 STUD x 40	1
32	90802A	FASTENERS	M8 A WASHER	8

L R

DRAWING NUMBER:	SHEET NO.	REVISION:
4030734	1/1	A

DESCRIPTION:
LARGE VARIABLE HEIGHT DISCHARGE CHUTE ASSEMBLY

GreenMech Ltd
Tomo Industrial Estate
Stowmarket
Suffolk
IP14 5AY
United Kingdom

Tel: +44(0)1449 765800
E-mail: sales@greenmech.co.uk

GreenMech
The Professionals' Choice

COPYRIGHT GREENMECH LTD.